Author: Nahuse
Illustrator: Gin
Environmental Artist: yish
Mechanical Designer: cell
Rebuild World I
Part One The Alluring Specter

Table of Contents

Cover
Chapter 1: Akira and Alpha
Chapter 2: The Burden of Resolve
Chapter 3: The Reward for Mortal Peril
Chapter 4: Ghost of the Old World
Chapter 5: Akira and Shizuka
Chapter 6: Trust
Chapter 7: Elena and Sara
Chapter 8: Reasons for Killing
Chapter 9: A Real Hunter
Chapter 10: A Dropped Wallet
Chapter 11: Akira and Sheryl
Chapter 12: Sherylâ€™s Gang
Chapter 13: The Unlucky Ones
Chapter 14: Bonds of Fortune, Misfortune, and Chance
Color Illustrations
Appendix
Bonus High Res Color Illustrations
About J-Novel Club
Copyright

Rebuild World I
The Alluring Specter
Part One
Author: Nahuse
Illustrator: Gin
Environmental Artist: yish
Mechanical Designer: cell
The advanced civilization that once dominated the world crumbled to ruins long ago. As ages pass, the survivors have begun piecing together the fragments of its wisdom and glory as they struggle to rebuild human society.

I am Alpha, and it's nice to meet you.

Rebuild World I

The advanced civilization that once dominated the world crumbled to ruins long ago. As ages pass, the survivors have begun piecing together the fragments of its wisdom and glory as they struggle to rebuild human society.

The Alluring Specter

Part One

Author:
Nahuse

Illustrator:
Gin

Environmental Artist:
yish

Mechanical Designer:
cell

>Episode 001

Part One The Alluring Specter

The advanced civilization that once dominated the world crumbled to ruins long ago. As ages pass, the survivors have begun piecing together the fragments of its wisdom and glory as they struggle to rebuild human society.

Contents

> **Chapter 1:** Akira and Alpha
> **Chapter 2:** The Burden of Resolve
> **Chapter 3:** The Reward for Mortal Peril
> **Chapter 4:** Ghost of the Old World
> **Chapter 5:** Akira and Shizuka
> **Chapter 6:** Trust
> **Chapter 7:** Elena and Sara
> **Chapter 8:** Reasons for Killing
> **Chapter 9:** A Real Hunter
> **Chapter 10:** A Dropped Wallet
> **Chapter 11:** Akira and Sheryl
> **Chapter 12:** Sheryl's Gang
> **Chapter 13:** The Unlucky Ones
> **Chapter 14:** Bonds of Fortune, Misfortune, and Chance

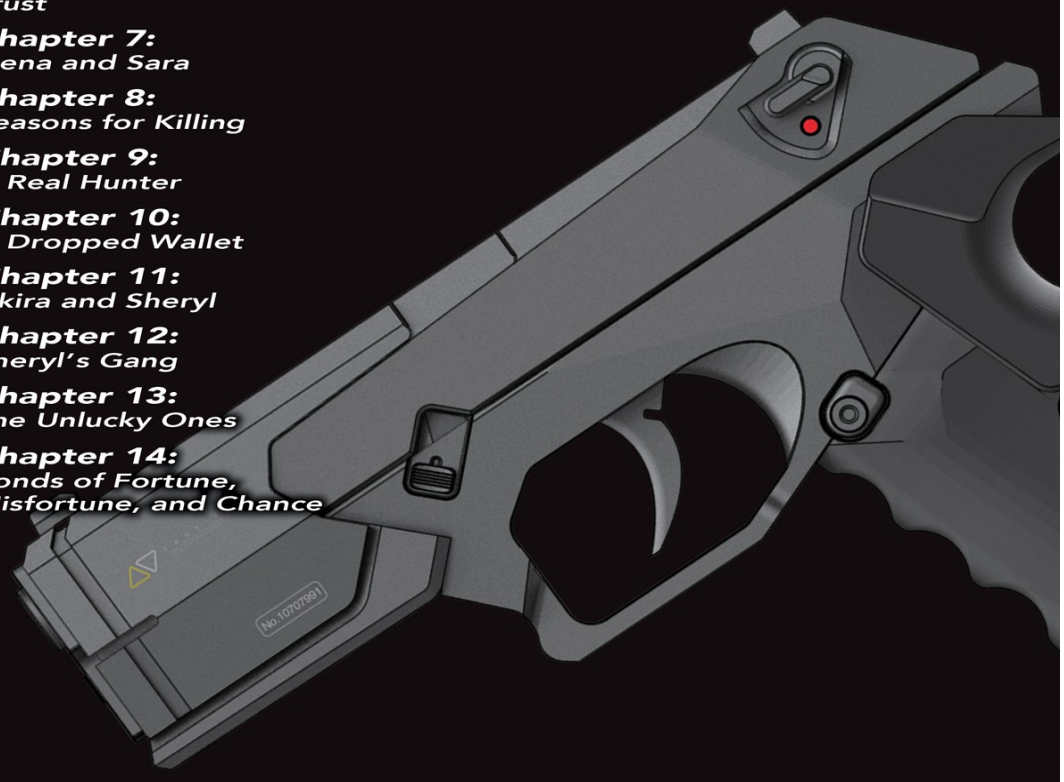

Download all your Fav Light Novels from Just Light Novels

Chapter 1: Akira and Alpha

The wild dog—if it was a dog—struggled to lock its jaws around its victim's head. Pinned to the ground, the boy shoved a chunk of rubble between its fangs, forcing it in with all the strength in his left arm. Yet the beast did not back off—it bit down hard, as if to consume the boy and debris together. The tough rubble—all that defended the boy's life—cracked beneath the fangs' relentless pressure.

Grim and desperate, the boy fired the pistol in his free hand. With the beast at point-blank range, the bullets found their mark—but instead of dying, it attacked him in a greater frenzy. He fired shot after shot to no avail, until the firearm fell silent.

No ammo.

"Damn it!" He cursed, beating his empty gun against the beast's face. Hanging on to the rubble, he shoved the creature away. To give up meant death, so on he fought, drawing on all his power.

The beast's strength gave out first. Even as it died, it struggled to devour him. Finally, though, it collapsed and breathed its last. With what remained of his might, the boy heaved the beast off of him. Then he lay there and exhaled deeply.

Aloud, he wondered, "Aren't I prepared to tackle this?" Then he shook his head, as if to scold himself for his moment of doubt. "No!" he cried out. "I was ready! Like hell I'm gonna give up and turn tail after a little danger!"

With a hard expression, the boy sat up, calmed his breathing, gathered his strength, and arose, determined that the deadly risks he had taken should not go unrewarded. He then emptied a plastic water bottle over his face and head, washing off the beast's blood that had spattered on him.

When he finished, he reloaded his pistol and renewed his resolve.

"All right," the boy muttered as he resumed his advance into the ruins of a sprawling city. "Time to move on."

Rubble littered the ground between rows of half-destroyed buildings. There was no sign of human life. The surrounding silence had swallowed the sounds of the boy's footsteps, of the pebbles his feet kicked up, and even of his earlier gunfire.

He was exploring the ruins with only his everyday clothes—heavily stained—and a handgun in a dubious state of repair. It was suicide. Only a fool would have run such risks in his gear—or someone in desperate need, like him. He knew this when setting out, and now his brush with death had given him a firsthand appreciation of it—or so he believed. Yet in truth, he was still quite naive about the dangers of these "ruins of the Old World."

Autonomous weapons, no longer able to distinguish friend from foe, would attack targets indiscriminately. Mechanical guards continued to eliminate intruders, obeying the orders of their long-dead makers. Descendants of biological weapons had turned feral. In the harsh

environment, plants and animals underwent one mutation after another. The people who lived in the East called them all “monsters,” making no distinction between the organic and the mechanical. And within the ruins of the Old World, those deadly creatures dwelled, including the predator that had attacked the boy.

He had known this, and yet he had still set foot in these same ruins of his own will, prepared to die. Something here was worth the risk, and his brush with death hadn’t changed that. So he pressed on, staking his own survival on his search for something far more valuable than the cheap life of a child from the slums.

His name was Akira.

◆

Akira stood on the outskirts of the Kuzusuhara Town Ruins—the closest ruins to his home in Kugamayama City and the largest within the city’s economic sphere. Not even his run-in with the monster could deter him from his search.

“Nothing but junk.” He sighed. “I can’t believe I risked my life to get here.” Musing, he wondered aloud, “Do I have to go deeper in?”

Akira lifted his head and stared into the heart of the ruins. Rows of skyscrapers filled the hazy distance, stretching to a horizon of more buildings than he could count. Even from that distance, he could tell that the buildings were larger and better preserved deeper among the ruins. Those distant structures stood in stark contrast to the dilapidated wrecks on the outskirts.

Could I get my hands on something valuable if I made it over there? Akira wondered. Tempted, he hesitated, then shook his head.

“No, I could never—that would be certain death.” He spoke as if trying to convince himself.

The difference between his run-down surroundings and the still-magnificent scenery in the distance lay in this: In the heart of the ruins, the advanced technology of the Old World still functioned, maintaining and repairing the distant towers automatically. Quite probably, then, the mechanical guards around the towers were also intact, deploying the staggering technology of the past against any intruders. A child like Akira had no chance of surviving the areas that the machines guarded.

“It’s hard enough hacking it here on the outskirts.” Akira continued arguing with himself. “Forget about going any deeper. I’ve got work to do.”

Shaking off his desire, he continued exploring the ruins for a while but found nothing worthwhile. Sighing, he noticed a set of bleached bones. He had already discovered and scavenged several similar skeletons, but without recovering anything of value.

Nothing on this one either, huh? Either someone had already stripped these earlier explorers of their valuables, or they had come as ill-equipped as Akira—and died in their recklessness. The thought weighed on Akira’s spirits.

The sun will set on me if I keep this up, he realized. That'd mean trouble. Should I head back for today? Making it back from a dangerous ruin alive is better than any treasure. I could end up as one of these skeletons if I stick around much longer.

Unconsciously, Akira grimaced: for all his excuses, he could not completely erase the desire for something—anything—to show for his trouble. He had already fought one monster and nearly died in the process. Even that brush with death would have been for nothing if he turned back now. His resolve to press on ran up against his desire for safety.

So Akira frowned, debating whether to press on or go back. As if weighing his choices on a pair of scales, his mind shifted back and forth between the two options. If he blithely continued his explorations and another monster attacked him in the darkness of night, he would die—and thus he hesitated. The scales began to tip in favor of retreat, though his decision was tinged with resignation.

Just then, a small, soft light floated across Akira's field of vision.

What?

The light flickered as it passed through the air in the shadows of the twilit buildings. Like the pale lamp of some luminous bug, smaller than a fingertip, it floated on its own. At first wary, Akira soon relaxed—whatever it was, it didn't look like one of the monsters that dwelled in the ruins. Following the gleam with his eyes, he spotted a stronger light spilling out from behind the ruined building up ahead. The faint spark flew along the street until it dissolved into the light just around the corner.

As Akira watched, curious, several more lights passed by his face from behind, disappearing around the corner of the building. He glanced behind himself but found only an expanse of darkness—and nothing else coming toward him. He looked forward, and once more saw the faint lights glide past him toward the corner. Akira didn't know what to make of it all, yet the mysteriousness of the light in the shadows of the ruins stirred his curiosity.

He hesitated a moment, then began to advance toward the corner. Whatever caused the light, it might be something useful. He had risked his life to make it this far, and his desire to have something to show for his troubles won out.

Under the spell of his greed and curiosity, Akira cautiously peered around the corner—and froze, stunned by what he saw. His gaze fixed on the spot where the tiny lights converged, lighting up a section of the broad avenue. In the center of this fantastical scene stood a woman. She appeared mystical, of unearthly beauty—and she was utterly naked, with every inch of her fine features and gorgeous physique open to the eyes of any who might see.

No slum dweller's skin could hold a candle to hers—smoother and glossier than what even the elite women of the city achieved with the help of wealth, obsession, and Old World technology. Her limbs seemed sculpted like a work of art, and the lustrous hair that hung to her waist showed not

the slightest trace of age or wear. Her face, worthy of the adoration of men and women of all ages, wore a look of dignity that enhanced her appearance even more.

Akira was entranced, even bewitched. One glance at her completely transformed his standards of beauty. Her outstanding comeliness eclipsed the memory of every other woman that he had ever seen—or even imagined—in his short life.

A last pale spark flew from behind Akira and came to rest on the woman's fingertips, where it vanished as if absorbed into her. The radiance about her brightened just a bit. Akira could not take his eyes off the sight.

Without warning, the woman shifted her gaze from her own fingertips to Akira, and their eyes met. Akira beheld every inch of her naked body, yet she only stared intently at him. Unable to break the enchantment, Akira returned her gaze.

The woman broke into a cheerful smile and stepped toward him. Instantly, everything changed for Akira. His rapt expression gave way to a tense, almost fearful, look. She was a stranger trying to approach him, and caution stirred inside him.

He raised his gun. "Don't move!" he shouted.

Yet nothing about the woman was as Akira expected. The remains of the Old World, home as they were to deadly monsters, claimed even the lives of large groups that were highly trained and heavily armed, yet she stood amid the ruins alone and unarmed. And she wasn't trying to hide—she didn't even seem on guard. She wore no clothing, nor did she seek to conceal her exposed body. The wind, eddying around the buildings, stirred up sand and dust, but there was no trace of dirt on her hair or skin. And she didn't bat an eye when a stranger pointed a gun at her, even though she could see he was shaking badly enough that he might pull the trigger by accident.

All at once, the mystical light around her vanished. She approached Akira, without a hint of caution or threat. As she drew near, naked and smiling, she seemed utterly out of place amid the backdrop of the ruins that had been stripped of fantasy and restored to mere gloom. Now Akira saw her in an entirely different light, as an extremely suspect and unknown factor.

As the smiling woman approached him, he shouted another warning: "I-I said, don't move! Don't come any closer, or I'll shoot! I mean it!"

Normally, Akira would have fired without bothering to give a warning. Here, though, the woman was obviously unarmed, she gave no hint of hostility, and he felt confused in a situation so foreign to his experience. So he restrained his trigger finger. But his patience had a limit. When the woman kept advancing, despite his warning, his finger tensed on the trigger.

Abruptly, she was gone. He hadn't even blinked, yet he saw no sign of movement. She vanished instantly, completely, and without warning. With his face twisted in confusion, Akira gazed around, but she was nowhere to be seen.

Don't worry—I won't hurt you. Impossibly, Akira heard her voice right beside him. He spun around instinctively, and there she was—so close he could touch her. Somehow she was clothed now. Crouching slightly, she looked Akira in the eye as she smiled at him.

So strange were the events of the evening that they already exceeded Akira's power to cope with the unknown, and as his mind strained to its limits, he became aware of a strange terror that gnawed at his psyche. He gritted his teeth, teetering on the edge of a half-crazed panic; people who lost their senses were the first to die. But Akira's experience of life in the slums held his consciousness together.

Akira aimed at the woman again, shoving the pistol in his right hand toward her at point-blank range. He should not have been able to completely straighten his arm—she was too close—but he did, burying his hands in the woman's chest.

He felt nothing there. He could see her right before his eyes, yet he touched only emptiness. Overwrought, he froze, his mind blank, with his gun and hands still piercing her chest.

And no matter how hard the woman tried to get a response from him, speaking and passing her hand before his face, Akira remained still, with his eyes vacant.

◆

Once, in a forgotten age, an advanced civilization had dominated the world. So long ago had it fallen, however, that one could scarcely imagine its former wisdom and glory; all that remained were its ruined cities, buildings crumbling into formlessness, and damaged artifacts. The very rain itself had been altered and remade; over that vast expanse of time, it eroded the ruins that stretched as far as the eye could see. Yet it also nurtured the trees that towered into the skies and supported life.

That long-gone civilization was now known as the Old World, and its advanced technology had left behind many traces: unknown materials piled into mountains of rubble, clusters of crumbling skyscrapers that still floated in the air, medicines that could cure even the loss of a limb, and weapons so powerful that they made extinguishing human life seem like child's play. These and other artifacts still littered the world, ages after the civilization that had wrought them was no more. Now they were simply known as "relics of the Old World," fragments of bygone wisdom and glory.

People had gathered those fragments and, over the generations, rebuilt society. Whatever had destroyed the Old World—a civilization so evolved that its technology was indistinguishable from magic—had still failed to wipe out the human race to which that world had belonged.

The East, as it was called, formed one part of the area inhabitable by people. It was home to numerous cities under the rule of governing corporations. Kugamayama was one such city. Massive walls protected part of it, and although the districts inside and outside the walls were equally part of the city, one could find an unmistakable difference between them.

The walls housed the elite district, the sanctum of corporate executives and others who held wealth and power, and the middle district, home to a relatively well-off population. Outside the walls lay the lower district, inhabited by those who—largely for economic reasons—were unable to live

within the walls' protection. And finally, nearest to the desert wasteland and its dangers, sprawled the vast slums.

Here Akira lived, one of the countless children of the slums. Like all of them, he was physically unremarkable: no cyborg implants, no enhanced organs, no nanomachine augmentations or other subtler techs. Nor did he have any specialized skills or formal education. He had no parents, no guardian, and no money, and he never had enough to eat. The slums were overflowing with children like him. His death would attract little notice, let alone surprise.

The monsters of the wasteland sometimes attacked the city, and their first targets were always the slums and slum dwellers closest to their desert abode. Akira had survived three monster attacks. He had made it through the first and second solely by running erratically and hiding behind any cover he could find. Akira had survived because others, people whose names he didn't even know, had bought him time—by being attacked, killed, and eaten in his place.

The third attack went down differently. Akira couldn't shake the small, dog-like monster; in the end, he'd fought it to the death, with only a handgun he'd chanced to come by. Miraculously, he had landed three shots on the monster's head. But his bullets hadn't killed the beast, which raced toward him, mouth gaping, to devour its prey.

Before the monster's jaws—abnormally large for such a small creature—could close around Akira's arm, he instinctively thrust his handgun between its teeth and pulled the trigger. The bullet, fired from inside the creature's mouth, avoided its tough outer skull and struck the head from within, destroying the brain and killing the beast. The monster took a few moments to die—long enough to sink its teeth deep into Akira's arm. Even so, he somehow avoided losing either life or limb.

After that, Akira made up his mind to become a hunter, for the opportunity it offered to improve his state in life. He was vaguely aware of the risks professional hunters ran, but his own victory, unaided at that, gave him confidence and hope.

Hunters sought wealth and fame in the desert wastes outside the cities. True, the wasteland teemed with monsters and other dangers that made even the slums, short on law and bursting with cheap firearms, seem safe by comparison. But the desert also promised fabulous wealth and power, for it housed the ruins and relics of the Old World.

Even the hostile monsters themselves were considered valuable relics. Organic monsters were the fruits of advanced bioengineering; mechanical monsters served as treasure troves of valuable components. Both fetched considerable sums in the cities. Successful hunters sometimes earned fortunes large enough to buy cities of their own. And one who seized total control of an Old World ruin that remained functional—especially a military facility—could even found a nation.

A capable hunter gained wealth and power that were orders of magnitude greater than the average person ever dreamed of. Their fortune and strength grew with every precious relic they brought back, allowing them to set their sights on ruins still more dangerous—and lucrative. The most successful, carrying Old World armor and weapons, sometimes acquired authority and military might on a scale that not even cities could match.

That day, Akira had set out to become a hunter. So far, he had killed a monster without help, but that only meant that his chances of returning alive from the monster-infested wasteland were no longer zero. Those chances were still enough to gamble on, however: if he went on living in the slums, then sooner or later he would die there. If he wanted to crawl his way out, then gambling was his only option—gambling on a hunt for a tomorrow that was better than today.

◆

Overwhelmed by his encounter with the mysterious beauty, Akira remained in a daze. Unperturbed, the woman stood patiently and waited for him to return to his senses.

After some time, Akira stirred. Though he still felt confused, he became aware that nothing had done him harm. His eyes focused once more on the woman.

Seeing his awareness return, she smiled again.

Are you all right now? she asked. Can you see me clearly? Can you hear me? Where are we, and who are you?

A look of suspicion darted across his face. “I can see you and hear you. We’re in the Kuzusuhara Town Ruins, and I’m Akira.”

Thank goodness. She seemed delighted. I am Alpha, and it’s nice to meet you.

Akira began to warm up to Alpha, just a bit. For the moment, she seemed safe—enigmatic, it was true, but not hostile. Extreme caution was better reserved for monsters and other direct threats, he felt.

“Ms. Alpha, um, I can’t touch you. You’re not a…” he hesitated. “A ghost?”

No, I’m not, although I would be in trouble if you asked me to prove it. This is a somewhat misleading explanation, and I don’t expect you to fully understand it, but the me that you’re seeing is a type of augmented reality.

Still smiling, Alpha launched into a detailed explanation for Akira, though it was largely meaningless to him. Whether by nature or artifice, the boy’s brain could wirelessly send and receive certain kinds of data. By transmitting the right information into the neural processes for sight and hearing, Alpha caused Akira to perceive her as though she were actually present. What Akira thought of as conversation was really an exchange of signals between his brain and vocal cords, and audio data inserted into his sense of hearing, without any physical sound waves. A similar process allowed them to see each other as well.

When Alpha finished, she saw from his face that he had understood none of what she said. So she tried again, presenting him with only the most basic information. Only you can see me, and only you can hear my voice. So you'll have to be careful, or people will think you're a weirdo who talks to empty space. That's all you need to know. Oh, and you don't need to call me "Ms." I'll just call you "Akira" as well.

All this time, Alpha's smile never left her lips. It was a smile with no trace of contempt, wariness, or pity for a filthy child from the slums. A smile, that is, that made Akira unconsciously feel more at ease around her.

"I see," he said at last. "So, what are you doing in a place like this, Alpha?"

I need someone to do me a little favor, so I was searching for someone who can perceive me—someone I can at least have a conversation with. Her smile took on a rueful tinge. I would have preferred a hunter, but, well, I suppose that was asking for too much.

Confused, Akira reflected, then wondered aloud, "Why were you hoping for a hunter?"

Because you could say that the favor I need involves the kind of work hunters do. Oh, but it isn't as though only a hunter could help me, so I hope you'll hear me out. Would you please?

That perfect smile returned to her face, and she would have said more had Akira not, after a moment of indecision, hesitantly interrupted, "Well, I *am* technically a hunter."

What? A hunter, at your age? Alpha started slightly. How long have you been in the business, Akira?

"O-One…"

One year?

Akira paused before replying. "One day. This is my first day as a hunter."

Alpha looked doubtful, and a lengthy silence fell between them.

"Sorry," Akira finally said. "Forget I said anything."

Since he had already settled on becoming a hunter, he didn't want to hide his chosen profession. Still, he realized he might not want to introduce himself as a hunter until he could back it up. Having retracted his claim, Akira turned to go, assuming that Alpha would have no business with a hunter who hadn't earned the name.

Alpha, however, smiled again and called after him. Don't say that. Would you at least hear me out? Fate brought us together: let us make the most of it.

He lacked the skill to call himself a proper hunter, and she knew it. But she also knew of no other humans who could see or hear her. And given enough time, Akira's present lack of skill would not be a problem for her.

I want you to conquer a ruin I indicate—in total secrecy, she continued eagerly. In exchange, I'll provide you with a broad range of support; you'll get that part of your reward up front. Once you master the ruins, I'll also

present you with a completion bonus: highly valuable relics of the Old World.

"You mean it?!" Startled, Akira raised his voice in spite of himself.

The woman hid a sly smile; outwardly, she wore a look that said she had every confidence in him. I do, she replied. And if you will pardon my bluntness, it seems to me that you've exhausted a lifetime's supply of good luck to get to this opportunity, so you're going to need my help going forward. If you want to survive, anyway. What do you say?

The stubborn part of Akira demanded that he doubt her words, yet he saw no evidence that she was trying to deceive him.

Besides, what would be the point of tricking a kid like me? Akira wondered. She must see I'm broke by looking at me. Or is she just making fun of me? And even if she is telling the truth, should I really take a job from someone I know so little about?

Then Akira had a flash of insight that made him reconsider. No normal person would give him the time of day. Only because Alpha was a mystery, because she had something to hide, had she brought this offer to him. In which case, Akira determined, he should make the most of his opportunity.

"All right," he agreed, surprising himself with how firmly he accepted his first mission as a hunter. "I don't know how much I can do for you, but I'll take your job."

Alpha beamed at him. We have a deal. In that case, I'll start your advance payment of support. Her expression abruptly became deadly serious. If you don't want to die, dive into the building on your right within ten seconds.

"What are you talking a—?" Suspicious once more, Akira started to demand details, but broke off when he saw that Alpha's grim expression brooked no argument.

Alpha was counting down. *Eight, seven, six...* Unless she was lying, he realized, he would die if he stayed there. A moment later, he was sprinting for the building as fast as his legs would carry him.

Alpha watched him go, dissatisfied. *So slow.* She sighed. His reaction time was not up to her standards. Still, they had only just met, and he hadn't technically been late, so she gave him a passing grade for the present.

Exactly ten seconds after Alpha began her count, an artillery shell from deep within the ruins struck the spot. A fiery explosion engulfed her figure as debris scattered in all directions. When the dust settled, Alpha was nowhere to be seen. She had not been blown up, nor had she escaped at the last moment—she had never really been there in the first place.

◆

As Akira dove into the building, an explosion rang out behind him. The shock wave, mingled with smoke, blew past him. He turned, startled, and saw that the artillery strike had partially demolished the place where he had stood just moments before. Fissures scored the hard ground, and

scorch marks disfigured the landscape. He had no doubt that, had he stayed there, he would have died.

More stunned than frightened, Akira came to his senses when Alpha appeared in front of him without warning.

“Wh-What was—?”

Once again, Alpha’s grim look cut his question short. She pointed to the stairwell. *Next, run up the stairs. Eight, seven, six...*

Akira raced toward the steps and clambered up desperately. Another explosion roared behind him, its shock wave blasting past him through the stairwell. When he reached the top of the stairs, Alpha met him on the landing. She pointed upward.

Hurry to the floor above. Five, four...

Ignoring his screaming lungs and legs, Akira sprinted up the stairs. Alpha watched him, a faint smile playing on her lips. The boy was acting much more quickly now.

◆

Akira continued to run as Alpha directed. He was out of breath by the time he reached the roof of the building. After a quick scan of the area, he spotted Alpha beckoning to him from the edge of the roof and went to join her without even pausing to catch his breath.

As he drew closer to her, he noticed that she no longer seemed as urgent as before. Slowing his pace, he allowed himself to refill his empty lungs. He sighed deeply when he reached Alpha’s side.

“Alpha,” he said, “what was that about?”

Alpha smiled at him from her position on the edge of the roof and pointed downward. *It’s faster to see for yourself,* she replied. *Look down there—carefully. Keep quiet.*

Puzzled, Akira obeyed—then grimaced. Below he saw monsters, the very beasts who had attacked him, prowling the ground as if searching.

They were canine in appearance, around two meters from end to end, but there the resemblance to large dogs ended. Small machine guns rose from their backs, and Akira even spotted some with what looked like rocket launchers or small missile pods. Together, the pack of creatures was patrolling the area in search of invaders.

Akira scowled, thinking how much the monsters resembled the one he had fought earlier, although that dog had lacked weaponry.

“What are they?” he wondered aloud.

Weapon dogs, Alpha replied. Artificial life-forms originally engineered to provide security in urban areas. Guns may grow from their bodies, but they’re still biological, not mechanical.

As Akira turned to look at her, she added, Those ones were probably created to police the town and assigned to guard this area. Each individual is different, but in general their weapons become more powerful as they age. I think that one with the missile pods is the leader of this pack.

While Akira supposed her information might be useful, this wasn't the reward he was hoping for. Nevertheless, a number of questions occurred to him.

"How can a gun grow out of an animal?" he marveled. "It doesn't make sense."

Their organic parts also store and maintain nanomachines, Alpha replied, as though sharing a bit of trivia. They ingest metals and other raw materials, then generate the armaments on their backs. I'm guessing that they've already mutated into something far removed from their original design. Perhaps they altered themselves to suit their current environment.

These priceless secrets would have astounded a specialist, but Akira comprehended neither their value nor their meaning. What he did grasp—just barely—was that even a gun growing out of an animal had some principle behind it, something that could be understood.

Now that the attack was over, Alpha's grim expression gave way to her original relaxed smile. This helped Akira feel safer, so he calmed down as well and sighed in relief.

Well? Aren't you glad you had my support? Alpha asked with a proud grin. You would have died if you'd stayed down there, you know.

"I know," Akira reluctantly admitted. "I wouldn't have made it without you. Thanks." His expression reflected a confused mix of sensations: lingering excitement and agitation from the monster attack, labored breathing from running for his life, stubborn distrust of this mystery woman, gratitude to her for saving him, resolve to collect his wits while he could, and more besides.

Alpha observed his face, probing his inner thoughts while she chipped away at his caution with her charming smiles. *You're welcome,* she replied. *Now that you've had a chance to taste what I am capable of, I'd like to talk about our future. May I?* The tone of her voice suggested that she had vital information to share.

"Go ahead." Akira looked her in the eye and gave a firm nod.

I need you to conquer a ruin. It isn't this one here, and it poses quite a challenge. You couldn't even reach it alive, let alone return again. To be blunt, you have no chance of success as you are now; even with my support, you would die before you finished. And so, to start, I'm going to help you gain the equipment and skills you'll need to clear ruins. That will be our goal for the time being, so—

"Er, can I ask something?" Akira interrupted a little hesitantly, sensing that Alpha was preparing to speak at length.

Of course. Alpha flashed a friendly smile. If you're having trouble understanding anything, don't hesitate to ask.

Alpha's strange friendliness took Akira slightly aback. "It's not that," he said, uncertain. "I mean, that's important too—I get that—but could we worry about the future later and focus on how we're going to get out of here alive?"

Alpha grinned, then stared at Akira in silence. Akira's face stiffened a bit.

Not good, he thought. Maybe I shouldn't have cut her off.

Yet the weapon dogs were still prowling around the building, and Akira couldn't stay hidden on the roof forever. Unless he managed to escape, he wouldn't have a future, and that made him nervous enough to interrupt Alpha. Only afterward did he realize that offending her might cost him his only means of survival.

Alpha detected the unease and panic creeping into Akira's expression, and she smiled amiably. All right, she said. I have a lot of questions I'd like to ask you when we have more room to breathe, so let's start by getting out of here and back to Kugamayama City. We can resume our discussion there, all right?

"Yeah. Thanks."

Akira let out a sigh, relieved that he now had a better chance of returning home alive. But Alpha's next order, delivered with that same smile, crushed his spirits once more.

Then go back downstairs now.

Akira spluttered and coughed. Recovering, he stared blankly at her. Unfazed, she walked off and, when he showed no sign of following, beckoned to him.

What's wrong? she asked. Let's go.

"Hold it!" Akira protested, snapping back to reality. "That's where we just ran away from, remember?! Why would we go back down there?! It's crawling with monsters!"

I'm happy to explain, but let's walk and talk. Unless you don't trust me, of course. Then there's nothing I can do. I won't force you.

With that, Alpha disappeared into the building, leaving Akira behind.

Akira remembered well how dangerous a single unarmed dog could be, and the pack below was bristling with firearms. Fear stopped him in his tracks. Still, when he saw Alpha vanish into the building, he gritted his teeth and followed her. He doubted he could make it back to the city alive by himself, and earlier he had survived thanks to her. All things considered, then, obeying her seemed his best chance for survival. So he hurried downstairs after the enigmatic figure.

Once Akira entered the building, he found Alpha right beside the entrance, smiling as if to say she knew he would come. Feeling embarrassed and, oddly, as if he had been defeated, he hurried after her down the steps.

His descent was quite peaceful compared to his earlier sprint up the stairs. Alpha signaled him to halt a number of times on their way down, and each time he stood still until she waved him on again.

At one point, Akira asked, "Why are we going back? Isn't it dangerous?"

Extremely dangerous, Alpha answered without hesitation.

For a moment, Akira was silent, stunned. Then panic entered his voice. "Hang on a sec! You mean it's not safe?!"

How could it be? Monsters are roaming the area.

"I-I know that, but that's not what I mean. Give me a real explanation. You said you'd tell me your plan as long as we got moving, remember?"

If you want to return safely to Kugamayama City from the Kuzusuhara Town Ruins, you'll need to escape this building first. Unless you can jump from the roof without dying, which I doubt, you'll need to use the stairs to—

Akira scowled, annoyed and a tad suspicious. "Fine," he interrupted with an edge to his voice. "Just tell me: can I really make it back alive if I do what you say?"

I think that you'll have a better chance than you would trying to go it alone, Alpha replied seriously. As I told you up on the roof, I won't force you. If you can't trust my directions, I'll withdraw my support. It would be a waste of time. She stared at Akira, waiting to see if he would end their partnership.

Finally, Akira hung his head. Seeming disgusted with himself, he said, "Sorry. I was out of line. I'll do what you say, so please help me."

Alpha smiled once again, her good mood apparently restored. *All right,* she said. *It's nice to be working with you again.*

That was a close one, Akira thought, relieved but still uneasy.

"And, if you wouldn't mind," he asked carefully, "would you tell me your reasons for your orders—just the important parts, simple and easy to understand—so that I don't get too nervous?"

I don't mind, Alpha responded at once. She began rattling off an explanation.

Different weapon dogs followed different patterns of behavior. Some relentlessly pursued any enemy they found, while others remained within a fixed area. Some continued to search the vicinity after losing sight of an enemy, while others immediately returned to their posts. And so on. Alpha had identified all of those individual differences and determined that returning by the stairs at that time would minimize the number of monsters that Akira would encounter on his way back.

Weapon dogs, she went on, possessed a specialized internal organ that produced ammunition for their armaments, and their bodies could only store so much ammunition at once. When those internal stores were exhausted, they required time to manufacture more and to reload their weapons. During that time, Akira would run a much lower risk of being shot in the back as he ran, even if the weapon dogs spotted him again. They might try biting him, but at close range Akira stood a better chance of bringing them down, even with his weak handgun. Alpha had weighed these and numerous other factors against each other before telling Akira what to do.

Concluding her explanation, Alpha added, That was just a brief overview. Would you prefer more detail?

“No, that was plenty,” Akira answered. “And I wish you’d told me all that up on the roof.” He thought her explanation sufficiently long, though he also wished she’d told him earlier.

In a dangerous situation, we usually won’t have time for lengthy explanations, Alpha said slowly as if trying to convince a small child. If you’ll take a bullet between the eyes in three seconds, and I take the time to explain that to you, how many seconds would that leave you to get out of the way? The answer is zero.

“I-I get that, but—”

What if I just told you to get down, and you stopped to ask me why? I can’t touch you, so I can’t tackle you to the ground. If you can’t respond to my plain orders immediately, you will die.

At that, Akira fell silent.

By the way, Alpha added. I’m giving you an explanation now because I’ve determined that you’re relatively safe.

Akira hesitated before responding with a sheepish nod and a “Got it.” He understood Alpha’s reasons, but he also had a feeling that the more he asked, the more her answers would highlight his own rashness.

As he reached the first floor, Akira’s expression turned grim as he saw the marks of the earlier attacks, still fresh. He immediately scanned his surroundings. Once he determined that it looked safe, he sighed and his expression softened. His relief, however, vanished when Alpha looked at him sternly.

Akira, she began, we’re about to leave the ruins. From now on, listen closely to my instructions and follow them as closely as possible. Every time you do something that I don’t tell you to, your odds of dying increase. Is that clear?

“Y-Yeah.”

Within the next thirty seconds, run out of the building as fast as you can. Once you’re outside, turn left and then keep running along the street and don’t look back no matter what happens. Is that clear? Alpha’s tone was hard.

“G-Got it.” Akira nodded, his features taut with a mixture of fear and stress. Even he knew there was no time to ask Alpha for an explanation.

Alpha moved to one side as if making way for him, keeping her eyes on him as she pointed to the building’s exit. Akira looked outside and saw more signs of the earlier attacks. He leaned forward a bit, psyching himself up to dash into a place he had so recently fled in desperation. But his feet remained fixed to the floor. Understanding and acceptance were not the same as action. He understood Alpha’s reasons, and he had accepted them, but he still lacked the resolve to put that acceptance into practice.

Alpha began to count down the seconds. *Five, four, three...*

What would happen if he ran out of time? For a moment, Akira imagined the consequences; then he was off and running out of the building. He raced along the ravine between crumbling skyscrapers as fast as his legs would

take him, his only thought to keep going, faster and faster. Soon, his breathing became ragged and his pace began to slow, but still he ran with desperation. His lungs and heart screamed, and his legs cried out in agony as they relentlessly pounded the hard, paved ground. Yet he ignored the pain, and on he ran.

He saw no monsters near at hand, nor did he hear any fighting. Perhaps it was safe enough to slow down now. The silence all about him seemed to say he was alone among the ruins. Heart, legs, and lungs all cursed him, begging for rest. Giving in a bit, he slowed his pace, though he kept running.

He saw no danger before him and heard nothing behind. He untensed and began to feel that he might already be out of danger. The growing pain and exhaustion became impossible to ignore.

He relaxed ever so slightly. *It must be safe now,* his mind whispered. Hesitant, he paused a moment to catch his breath, looking back to ensure no danger lay behind him.

Despite Alpha's insistence, he had disobeyed her orders after all.

And he froze. His gaze fixed on a gargantuan monster not far off, standing erect. It was alone, but its massive bulk did more to intimidate Akira than the entire pack of weapon dogs.

The monster resembled the weapon dogs, with an enormous cannon rising from its back. Its canine portion, however, was unlike any that Akira had seen, and its whole appearance was twisted, an affront to elegance. Eight legs sprouted without regard for symmetry. A warped canine head sported two eyes on its right side, one above the other, and a single eye on its left. The eyes were all of different sizes and, mounted on the beast's distorted skull, it was doubtful whether they even commanded a decent field of view. Despite that, all three eyes were fixed on Akira.

The behemoth gaped wide, howled, and fired its cannon. A shell landed close to Akira and exploded, sending rubble flying in all directions. Fortunately for the boy, scattered debris absorbed most of the shock wave and dispersed the rest, so he escaped injury and suffered only a strong gust from the explosion.

The monster shifted its bulk to fire again, but no shell came. No ammo. With another howl, it launched itself toward Akira on its imbalanced legs.

Still dazed from the sight of the beast, Akira couldn't make himself move even as it charged him.

Run!

Alpha was nowhere to be seen, but her voice rang in Akira's ears. He finally snapped back to his senses, breaking into a mad dash. Yet the monster had gained considerable ground. Disobeying Alpha had significantly increased his odds of dying, just as she had warned.

Akira ran on, once more ignoring the cries of pain from every inch of his body. The monster's footfalls sounded steadily louder. Its twisted legs slowed it down, but the tremors and booms that thundered every time its

paws struck the pavement left Akira with no doubt as to its immensity and power. He knew he stood no chance if those feet trampled over him. Every rumble or shudder mercilessly chipped away at his spirit.

Alpha suddenly floated beside Akira as he continued his frantic flight, gliding alongside him. She looked grim—and exasperated.

That's why I told you not to look back, she said. Weren't you listening?

"I'm sorry!" Akira pleaded, wide-eyed. "I'll do it right next time! So please, do something!"

All right. When I give you the signal, turn around and fire your gun.

"My gun?!" Akira shouted with a grimace. The order seemed so reckless he couldn't help it. "What do you expect me to do to that thing with this dinky pistol?!"

Forget it, then, Alpha replied, her tone frigid. *I won't insist.*

"Please!" Akira shouted, spending a precious breath.

Alpha's grin betrayed a hint of satisfaction. Don't bother trying to aim; just point the muzzle straight ahead and empty the magazine as quickly as you can. Timing is everything, so do your best to match my signal. Understand?

"Got it!"

Alpha began to count down the seconds, bending her fingers as she did so.

Five, four, three...

Once more, Akira felt he had no choice. Once more, going on as he was would only get him killed.

Alpha's voice echoed behind him. *Two, one, zero!*

Akira spun around, lifted his gun, and squeezed the trigger. He didn't bother to aim, but one of the monster's gigantic eyes happened to be directly in front of the muzzle. As he fired at point-blank range, his bullets penetrated the eyeball and sank into the creature's head.

Half-crazed, Akira kept firing, each successive bullet delivering heavy damage to the beast's head and brain. Yet despite the severe injuries he inflicted, the beast clung tenaciously to life—for a moment. Saved from an instant death, the beast was nevertheless fatally wounded, and it had only time for one final howl before breathing its last. Its earsplitting cry shook the ruins.

The dead beast's bulk collapsed on the spot, but Akira still kept his now-empty gun trained on it, repeatedly pulling the trigger. Not until he saw the blood flowing from its head and its body lying in total stillness did he at last stop.

"D-Did I get it?" Akira trailed off, still breathing heavily. He watched the monster warily, uncertain whether he had really finished it off. Then, as he calmed down and began to catch his breath, he took another look at the massive body lying in a pool of its own blood. He finally felt that he had won.

Akira.

On the verge of sinking to the ground, he turned toward the voice and his face relaxed. He was about to thank her and apologize when he saw that she was pointing outside the ruins with a smile. His expression grew taut once more.

Within the next ten seconds...

Akira didn't wait for Alpha to finish speaking before he broke into a frantic run. Alpha remained and watched him go until, with an audacious grin, she vanished, leaving only the monster's corpse in her wake.

In fleeing headlong from the onrushing monster, Akira had missed what was transpiring behind him. The monster had perceived Alpha—who had told Akira that she was only visible to him—as she hovered close behind Akira, and it had tried to sink its fangs into her. With her own image as a decoy, Alpha had led the monster into just the right position before allowing it to pounce. The monster's jaws had closed over her, but it had felt no prey and had frozen in confusion. At that moment, Alpha had ordered Akira to shoot the creature. Thanks to her manipulation, the monster's eye ended up in just the place for Akira to shoot it, allowing him to easily dispatch the beast.

As he ran desperately from the ruins, Akira also failed to make one other connection: the pack of weapon dogs had appeared as soon as he had accepted Alpha's request.

◆

Having barely survived his encounter with the weapon dogs, Akira kept running for his life. Eventually he made his way outside the Kuzusuhara Town Ruins to an area that was a bit safer, albeit still dangerous.

As if she had been waiting there, Alpha appeared and greeted him.

Rest for a bit, she said graciously as he sank to the ground, exhausted, but let's keep talking. I'll help you acquire the equipment and competence you'll need to explore the ruins I tell you to. Do you follow?

Akira nodded, struggling to catch his breath. "Yeah," he gasped. "Keep going."

You can either buy equipment or find it in the ruins. Competence you can only get through training and combat. But rest easy: under my guidance, you'll receive an elite education in no time.

Akira had no idea what his training would consist of, but Alpha seemed confident that it would be quite effective.

"That'll be a big help," he said, "but why do all that for me?"

Don't you worry about that, Alpha replied. This is all part of your advance payment. And since I need you for this job, it's in my interest as well. If you think I'm giving you too much, then maybe you can train even harder to make up for it.

"F-Fine. I'll do the best I can." He gave a firm nod, though he winced at Alpha's unflinching smile, which suggested just how intense his training would be.

Alpha returned the nod, seemingly satisfied. Then for now, let's turn you into a profitable hunter, she said. For one thing, that will make it easier for you to obtain high-performance gear. Right now, you're a hunter in name only—you've registered with the Hunter Office, but that's all. We need to change that, and soon. As an afterthought, she asked, Just to be clear, you have registered with the Hunter Office, haven't you?

Akira fished his hunter ID out of his pocket. It looked like a cheap scrap of paper, but it bore the designation "Eastern League of Governing Corporations Certified Class-Three Special Laborer," with lines for his name and hunter ID number.

Alpha inspected it for a moment. Are hunter IDs supposed to look this cheap? she asked, wondering privately if it had been forged. Mind you, I'm not doubting your story. This won't be a problem as long as you can use it as a hunter ID. You can use it, can't you?

The scrap of paper was definitely what the official had given Akira when he'd registered as a hunter. Having it called "cheap" was a blow to his confidence. "It should work," he replied. "I think."

Would you mind answering a few questions for me? Alpha asked. Like where you registered as a hunter?

"Fine." Scowling—for his memory of the experience was unpleasant—Akira began to tell Alpha the story of his registration process.

Akira registered with the Hunter Office in the lower district of Kugamayama City. From the outside, the branch office on the outskirts of the slums resembled a dive, with faded lettering on its damaged sign. A worn Hunter Office logo was the only clue that still identified it as a branch office.

The official Akira met with had been demoted to the post, and he looked as motivated as he was competent. While Hunter Office jobs were usually desirable, few people wanted to work so near the slums. So although the Hunter Office was among the most popular employers in the East, with many highly capable officials, Akira wouldn't have known it to look at this man.

"I'm here to become a hunter," Akira nervously told the official. "Can you process my registration?"

The official tutted in annoyance before setting down his half-read magazine, clearly annoyed at having to help a kid from the slums.

"Name?"

"I'm Akira."

The official jabbed the keys at a nearby terminal and waited for a printer to spit out a hunter ID. He carelessly grabbed the cheap paper and tossed it at Akira before returning to his magazine as if to say his work was done.

Akira looked back and forth from the hunter ID in his hands to the official, confused. He had imagined registration to be a more involved process.

“I-Is that all?” he asked, unsure whether he was actually done.

“That’s all,” the official said, glaring at him. “Now scram.”

“You’re just gonna ask me my name? Aren’t there more questions?”

“You think anyone wants to know about *you*?” Irritated, the official waved a hand for Akira to leave. “I don’t give a damn about some damn nobody who’ll bite the dust in a heartbeat. I wouldn’t even ask your damn name if it weren’t the rules, and I don’t give a damn if it’s your real name or not.”

A superfluous reminder to Akira of how the rest of the world saw him. He left the Hunter Office in silence.

Finishing his story, Akira stared hard at his hunter ID. His eyes showed that he knew his place in the world, but they also burned with the desire to climb higher at any cost.

Alpha flashed him an encouraging smile. Let’s start your training with literacy, she said. Acquiring information is a vital skill. And don’t worry: with my flawless support, you’ll be reading and writing before you know it.

“Got it. Thanks. Wait, how did you know I can’t read?”

Because the name on your hunter ID is “Ajira.”

Realizing how careless and contemptuous the official had been with him, Akira nearly crumpled up his ID.

Now, let’s head back to Kugamayama, Alpha proposed with a sardonic grin. We can pick up our talk there. Leave any reading to me until you finish learning to do it yourself.

Akira nodded without a word, put away his hunter ID, and hiked off toward Kugamayama City. Alpha fell into step alongside him.

“By the way,” Akira asked casually, to distract himself from his frustration, “what was that monster we killed in the Kuzusuhara Ruins?”

A weapon dog, Alpha replied.

“Huh? You mean it was the same kind as the others? It looked totally different to me.”

That one probably failed when it tried to modify itself. That’s why it was weak enough for you to bring down.

“So, it was all bark and no bite?”

That depends on your point of view. Maybe it just had a weakness that you were lucky enough to take advantage of. But if you think you could beat it again—without my support, of course—then I’d say that “all bark and no bite” is a fair assessment.

“No way in hell.”

Then that just goes to show how amazing my support is. You might consider thanking me. Alpha smirked, proud and mischievous.

Akira grinned back hollowly. “Thank you very much,” he said, and he meant it. He owed Alpha for covering for his mistakes—though it was hard for a rough kid like him to thank her honestly when she was asking him to.

You're very welcome, Alpha replied cheerfully. She seemed to understand how he felt, but there was still something teasing about her smile.

◆

Thus, on Akira's first day as a hunter, he met Alpha and—somehow—made it back to the city in one piece after his death-defying expedition into the ruins. So began the checkered career of Akira and Alpha.

Chapter 2: The Burden of Resolve

The enormous weapon dog chased Akira. Everything about it—its huge, twisted head, its eight unbalanced legs, the massive cannon sprouting from its back, and the gargantuan frame that supported it—warned of inescapable death.

Akira ran like a madman from the beast as its murderous howl rang out behind him. Its thick legs thundered on the ground beneath its bulk. Cannon shells rained around him. His situation was dire.

“What do you expect me to do to that thing with this dinky pistol?!” he screamed, but his voice was drowned out among the bellows and cannon fire, and there was no one to answer him. Death snapped at his heels.

Akira finally spun around and fired his gun desperately. His bullet sank into the dog’s face. Again and again he pulled the trigger. Every shot found its mark, but the weapon dog didn’t even flinch under the hail of gunfire. Instead, it pounced at Akira with a speed that belied its great size, jaws wide to devour its prey. Akira stared into the monster’s mouth, larger than his entire body, and knew his death was inevitable moments before he was torn apart.

He snapped awake. He lay in a familiar corner of a back alley in the slums—his usual sleeping spot.

“A dream?” he murmured. He still felt rigid with fear and confusion.

Good morning. Alpha smiled right beside him. Did you sleep well?

Instinctively, Akira sprang back and pointed his gun at her. Strangers could be dangerous, and it irked him that he had let one get so close to him without noticing.

Alpha looked slightly surprised but not offended. *I’m sorry,* she said gently. *Did I startle you?*

Though still wary, Akira relaxed. That is, he looked less like he was facing a dangerous stranger and more as though he were simply talking with a—presumably—safe acquaintance.

“Alpha?” he asked after a moment.

That’s right, she replied, her open smile a contrast to Akira’s wary look. *Did you forget about me?*

Akira sighed, relieved, and lowered his gun as the events of the previous day finally came back to him. “Sorry,” he said sheepishly. “You kind of surprised me. When I wake up and someone’s next to me, it’s usually a robber or something.”

It’s fine. Forget it. Alpha’s voice sounded unconcerned, convincing Akira that she really wasn’t mad at him.

That was close, he thought, relieved that he hadn’t lost his precious partner. I guess pointing a gun at Alpha doesn’t bother her much—they can’t hurt her anyway. Still, I’m glad that was a dream. That might’ve been my life if I hadn’t run into Alpha.

With the rough start to his day behind him, a new phase in Akira's life began.

◆

The Kugamayama slums lay on the city's outskirts, stretching along the edge of the wasteland. They were the city's garbage dump—disordered, impoverished, and plagued with predators. Monsters from outside or robbers from within: both were equally likely to prey on the weak. Escaping this trash heap had been Akira's reason for becoming a hunter.

The city provided the slums with food rations twice a day, once in the morning and once in the evening; Akira showed up as often as he could, and always had to wait in line. Today, people were already forming a queue, though it was still much too early for the distribution. Akira and Alpha joined the end of the line.

Order and courtesy were mandatory in the ration line. Anyone who caused a disturbance or tried to cut ahead would be denied their share of provisions; in some cases, the distribution might even end early. When that happened, the person responsible was beaten, unsurprisingly.

More subtly, the practice served as a form of silent education on the part of the city. It was in the city's interest to ensure that the slum dwellers at least knew how to form an orderly line, and the distribution helped convince them that they would all suffer if anyone in the slums broke the city's laws. That education had borne fruit: after a string of deaths at the hands of the mob, the ration line now remained orderly and calm amid the general violence of the slums.

In more ways than one, Akira had the distribution of rations to thank for his tenuous survival. Not everyone was content to starve to death in peace just because they had no money and food, and shipments of firearms kept inexplicably turning up in the slums. A supply of food helped prevent desperate slum dwellers from grabbing the weapons and becoming bandits. Thus, even as the distribution center drew anyone too poor to feed themselves to the slums, it also maintained a modicum of public order.

As Akira waited in the ration line as usual, Alpha's exceptional appearance struck him again. With her captivating face, lustrous hair, delicate skin, alluring figure, and revealing outfit, she should by all rights have been the center of attention—especially since the quality of her "Old World" clothes marked them as obviously expensive. Anyone versed in the Old World could identify them on sight as products of its advanced technology, and their high value as Old World relics would instantly draw attention.

For all these reasons, under normal circumstances, Alpha should have stirred up a commotion. And yet no one reacted to her, which convinced Akira that she really was visible only to him.

“You weren’t kidding when you said no one else could see you,” he quietly remarked to her.

Of course not, she replied. Didn’t you believe me?

Akira only responded to her limpid voice; he gave no sign of seeing her, lest he appear to be conversing with a hallucination. “That’s not what I meant,” he whispered hurriedly. “I just figured there would be some other people who could see you, even if most can’t. I mean, wouldn’t it be weird if I were the only one?”

Unlike Akira, Alpha made no attempt to avoid being overheard. Oh, so that’s what you meant, she replied. That’s complicated, and it would take a while to explain. Let’s go over it in detail later.

The distribution began, and Akira’s turn came. He took his food ration and moved a short way away from the line. He had to be careful: if he moved too far away, someone would try to steal the food he had spent all that time waiting for. Close to the line, fighting was tacitly forbidden, so as to avoid interrupting the distribution and inciting a riot. Since both would-be robbers and their targets carried guns, the unspoken peace agreement helped to avoid a lot of bloodshed.

That morning’s ration resembled a sandwich in a clear wrapper, stamped with an ID code. Akira stared closely at it for some time without eating.

Aren’t you going to eat that? Alpha asked, puzzled.

In its unsurpassed humanitarianism, the city supplied free meals for even the most impoverished slum dwellers. These tantalizing feasts came from a number of sources: synthetic ingredients produced by questionable, but still functional, devices excavated from some ruin; experimental vegetables grown on farmland with uncertain levels of soil pollution; pieces of organic monsters deemed *probably* safe for human consumption; and the like. After distributing the food to the slum dwellers for a fixed period, the city would watch and wait. If a rash of corpses or mutants failed to materialize, the ingredients were judged to meet the required safety standards, and the city would market them to the general public at a price. Then new items of unknown safety would take their place in the rations for the slums.

Ingredients like these made up the bread and filling of the sandwich in Akira’s hands.

“I’ll eat it,” he said at last.

The people distributing the rations never mentioned such minor details, but the recipients—including Akira—still had an inkling of them. Even so, refusing to eat was not an option, since the only alternative was death by starvation.

Of course, the city did require a kind of payment in return for its generosity. Since the distribution center was located in the slums, anyone in need of free food migrated there out of necessity—thus joining the first line of defense against the frequent waves of monster attacks. To defend

themselves, the slum dwellers were forced to take up the firearms that somehow kept making their way into the city outskirts. With these guns and their own bodies, the denizens of the slums served as a buffer between the city and invaders—mutant, man-eating plants, autonomous weapons, and more—until the city defense forces destroyed the threat. It wasn't compulsory, strictly speaking, but they had nowhere to run.

Over time, some survivors became proficient in combating the monsters. Most of these became hunters, who—if all went well—would bring back relics from the ruins, boosting the city's economy. Some of the profits even covered the costs of the distribution center.

So, in the end, Akira was doing just as the city intended when he set out to become a hunter. The powerless were sometimes driven to unavoidable choices. Still, Akira himself had made the choice, and even if he had been forced into it, he had no regrets.

The sandwich tasted iffy. Questions of cost and safety aside, Akira wouldn't have eaten it if he'd had any other option. As he chewed, he dreamed of becoming a successful hunter who enjoyed safe, delicious food every day—and his gaze drifted to the person who might help him make that dream come true.

Alpha was gently smiling.

◆

Akira followed Alpha deeper into the Kuzusuhara Town Ruins. Rubble from collapsed buildings and other kinds of debris blocked off sections of road, turning the ruins into a bewildering maze, while some of the dilapidated structures still standing were home to monsters that had adapted to the environment. In some areas, the monsters had even established their own unique ecosystems.

Relic hunters eliminated any monsters that blocked their progress and sometimes even repaired the streets to secure easier access to deeper areas. As often as not, they then encountered more powerful monsters and lost their own lives. As a result, deeper areas of the ruins tended to be more difficult to navigate, with deadlier monsters. And because fewer hunters reached them, such places naturally retained a larger quantity of relics. In other words, the more inaccessible areas promised both greater danger and greater profit.

Even Akira knew that much. He had spent the previous day exploring the outskirts of the ruins and had not even ventured far into those. Today, however, Alpha had recommended that he set out for the heart of the ruins. Not surprisingly, Akira hesitated, but Alpha's confident attitude won him over, and he ultimately went along with her plan. Alpha had explained to him that they would need to venture farther into the ruins if they wanted to get their hands on more valuable relics. She would guide him, and he would be safe so long as he followed her instructions.

Akira had found it difficult to say no to those assurances. He had become a hunter to improve his life, and it was thanks to Alpha that he still *had* his

life. So he would never get anywhere if he couldn't forge ahead even when she promised him some degree of safety.

At first, Akira followed Alpha's instructions without question. But as time wore on and she issued one seemingly meaningless order after another, he gradually began to doubt her. First, she told him to proceed slowly with his back against the wall of a ramshackle building. Next, she wanted him to enter that building, not through the clearly visible doorways, but through a window after scaling a nearby heap of rubble. That done, he was to exit by the doorway he had just avoided. She sent him down one street multiple times and then told him to wait for a while in the middle of another. Only after retracing his steps several times was he to proceed farther in. He followed all those directions, but he couldn't help feeling that he was wasting a lot of his time.

True, when the weapon dogs had attacked Akira, ignoring Alpha's orders had nearly gotten him killed, while obeying seemingly reckless ones had saved his life. So he thought twice about questioning her directions and carried them out without complaint, but each apparently pointless action he took made him a bit more distrustful. Eventually, he could bear it no longer.

"Hey, Alpha?" he said.

Yes?

"We're not lost or just winging it, are we?"

We are not, Alpha answered, without a shred of doubt in her voice.

"You're sure?"

I am.

"But I feel like we keep going the same way over and over again."

Only because we needed to, Alpha explained with a slight smile. We had to avoid the dangerous routes—or your own bad luck, if you prefer to think of it that way.

Akira looked askance at her. "So it's my fault?" he asked.

It is, Alpha repeated in a tone that forestalled further argument, though it didn't dispel Akira's frustration and doubts.

They continued into the ruins for a while longer. Then, just as they were about to exit an alleyway, Alpha stopped and announced, *We're turning back.*

"Again?" Akira grumbled as Alpha passed by him. Although he'd had more than enough of this, he began to follow her back. But then he halted. Beyond the alleyway, he could see a broad avenue, and it piqued his curiosity. A thought came to him: all he had to do was take a look ahead and see if there was a compelling reason to turn back. If so, all of his complaints and doubts would be instantly resolved.

I won't go far, Akira told himself. I'll just take a peek.

He poked his head out of the alleyway and warily surveyed the avenue, but all he saw was another unremarkable stretch of desolate ruins.

I knew it. There's nothing there.

But just as Akira's irritation began to surface, Alpha shouted sharply, *Get back here now!*

Without warning, a roar and a flash of light came from the supposedly deserted scene that Akira had just been looking at. Artillery fire! For a moment, the flash and shock wave disrupted a monster's camouflage. Akira froze at the sight of the gigantic machine that filled what he had taken for an empty street.

Boom! A heavy shell struck a building not far from Akira. There came a blast of wind. A shock wave destroyed part of the structure, flinging massive chunks of debris all around them. The ground shook, and Akira reeled, frozen in shock.

Hurry back! Alpha shouted. You're going to die!

Akira snapped back to reality and broke into a run, dashing madly down the shaking alleyway through the hail of rubble. As Alpha instructed, he found shelter in one room of another building not far away. The roars and tremors of artillery fire kept up, and dust and fine debris continued to rain from the ceiling.

That was a close call, Alpha told Akira, her face and voice stern. You nearly died. I hope you realize that you could have avoided that if you'd listened to me.

Akira huddled in a corner of the room, looking dejected, and did not answer immediately. After a while, he managed a quiet "Sorry." His apology was charged with self-disgust, and no one could have missed the dour note in his voice.

Alpha's face took on a slightly sad smile. You may not have been happy with my directions, she said gently, but I'll never tell you to do anything that puts you at a disadvantage, and if you ask me later, I'll explain myself until you're satisfied. What would you like to know?

Despite Alpha's encouraging grin, Akira remained silent. Alpha's expression grew concerned, even as she smiled. We only met yesterday, so I'm sure you'll find it difficult to trust me about a lot of things. That's only natural. But I'll be in a lot of trouble if you die, so I'll do my best to make certain that doesn't happen. It may not be easy, but at least try to believe that.

Even Akira could tell that she was worried about him. Mired in a sense of guilt, he forced himself to answer. "Got it. Sorry I doubted you."

Alpha tried to comfort him. Don't be. I don't expect you to put total faith in me right away. These things take time and effort. From both of us.

That did something to lift Akira's spirits, and he decided to act cheerful —even if it was only an act. It would also help him shift his focus to what lay ahead. He forced himself to smile. "I guess so," he said. "I'll put in that time and effort too. What should I do next?"

Alpha assessed Akira and determined that his mental state required a little longer to recover. Stand by here until the situation outside settles

down, she said. I'm guiding the monster away from this area, but I think it will take a while.

"Hang on. You can do that?" Akira asked, surprised.

Alpha flashed a haughty grin. Depending on the monster and the situation, yes. Autonomous weapons, like that mechanical monster, sometimes use video feeds and other external data from nearby surveillance systems to help them monitor their environments.

As Akira listened to her with rapt attention, it did not occur to him that he was perceiving Alpha through a similar process.

We got lucky this time, she went on. I was able to access an external video feed that the monster uses for visual information. It should still be attacking a fake image of you. That's also how I made it misidentify your position when it first attacked.

Akira was even more surprised at the range of Alpha's abilities.

I couldn't have done it to a monster that relied solely on its own optical data, she added with a sly grin. That was a close call.

A hint of a question entered Akira's expression. "What would have happened to me if it had been one of those?" he asked.

That artillery shell would have blown you to smithereens, of course, Alpha answered without hesitation. Her smile never faltered.

"Y-Yeah?" Akira frowned slightly, but he didn't lower his head in shame. Alpha's upbeat attitude seemed to have had its effect.

Let's keep talking for a bit longer, she said. Say, do you have any questions for me? Just ask me whatever's on your mind.

Being told that he could ask anything actually made it harder for Akira to think of a question, but Alpha's pleasantly expectant smile made him hesitant to tell her that he didn't have one. Moreover, this was technically one of Alpha's instructions, and he felt that following it was part of the time and effort he owed her. Scavenging for something to ask, he thought back to their first meeting. Then it hit him.

"Okay," he said. "Why were you naked the first time I saw you?"

Alpha had donned clothes shortly after their encounter, and she remained fully dressed, so her nudity had to have been deliberate. Akira had been too shocked at the time to care, but it stood out as unnatural in retrospect.

Alpha's grin became both daring and a little impish. Akira barely had time to wonder before she made her clothes disappear, exposing every inch of her naked skin and flaunting her captivatingly curved figure without the slightest hint of embarrassment.

What do you think? she asked cheerfully, with a gesture that was almost seductive.

Akira was startled but entranced. "About what?" he responded, becoming flustered as soon as he returned to his senses. "Actually, scratch that; just put some clothes on!"

Alpha restored her outfit with a satisfied smile. Quite a charming body, isn't it? Not to mention eye-catching. Don't you think it would make me the center of attention? You were looking harder at me than at anything else around you back then, you know.

"Wh-What do you expect?!"

Akira had indeed been more entranced by Alpha's nudity than by the fantastical scene of dim lights around her, but it was embarrassing to hear her say so. Alpha's response, however, took him by surprise.

And there you have it, she said. That answers your question.

"How do you mean?" Akira asked, forgetting his embarrassment in his curiosity.

I mean that it was an effective way to locate someone who could perceive me. Not many people visit the ruins in the first place, and even fewer can see or hear me. I needed an appearance that would guarantee a reaction from those few who could, without making them more cautious than necessary. I experimented with a lot of looks, and nudity worked best.

"I was totally on my guard with you, though."

But you still didn't run away the moment you saw me, did you? What do you think you would have done if I'd been carrying a gun and looked like a hardened soldier when you first saw me?

Akira tried to picture the scene: a brawny, heavily armed soldier standing in the dim light—more than enough to make him forget all about the fantastical atmosphere. Then he imagined his gaze meeting the soldier's.

"I guess I would've run for it," he admitted. "Probably as fast as I could."

Of course you would. I needed people to be able to tell at a glance that I wasn't armed, while still definitely taking an interest in me. And their reactions had to be obvious enough for me to be sure that they could see me. Being naked fit the bill perfectly. Alpha flashed a rueful grin. Still, I didn't expect you to be that wary of me. Sorry about that.

Akira grimaced. Now that Alpha had pointed it out, his behavior did seem like an overreaction. Her explanation also more or less satisfied him. But her mockingly playful display of her exposed body made him want to have the last word.

"Still," he said, "going buck naked doesn't sound like the greatest idea."

It doesn't matter, Alpha replied. It's artificial anyway. I don't mind as long as I can accomplish my objective.

"It's what?"

Artificial. My appearance is generated using computer graphics, so I can change it at will. Alpha suddenly looked like a girl even younger than Akira. Her face was youthful, although it held a promise of future beauty, but there was something grown-up about her smile that marked her as the same person.

"Whoa!" Akira exclaimed in surprise. "You *are* Alpha, right?"

That's right, she replied. What do you think? Charming, right?

“Huh? Oh, sure.” Akira was surprised, but she noticed that his reaction to her new appearance didn’t seem particularly positive.

I can do the reverse as well, of course, she said as the girl grew into a woman in her prime and then kept aging into an elderly lady. Now her face projected the refinement that came with the passage of years, despite the many wrinkles that creased it.

“Whoa,” Akira said. “That’s wild. I guess you really can change whenever you want.” He sounded impressed as well as surprised, but he didn’t give any sign that he preferred this appearance to her earlier one. Once she was certain of that, she reverted to her initial form.

That’s not all. I can change my build, hairstyle, and clothing too.

Alpha grinned proudly and began assuming one appearance after another. Her height changed—now taller, now shorter—as her figure ranged fluidly from scrawny to heavier-set. She cropped her hair short, grew it out until it trailed on the floor, styled it into shapes that blatantly defied gravity, and even made it glow all the colors of the rainbow. Her clothes altered as well, from some kind of school uniform to a dress suited for a high-society party, a flashy swimsuit, camouflage fatigues, a pilot suit, and more. Some of her outfits were so avant-garde that it was doubtful whether they had ever actually existed.

At first, Akira found her transformations startling. But after a while, he became absorbed in watching her pose in a multitude of outfits. His life in the slums had been virtually devoid of entertainment, and as Alpha danced in her various outfits he found himself quite entranced.

While Akira stared at Alpha, she also observed him. He failed to notice that, although the changes started out random, her age, build, hair, clothes, and every other aspect of her appearance gradually adapted themselves to his preferences. Alpha’s smile was alternatively cheerful, bewitching, tranquil, and charming as she continued her study of Akira.

If there are any outfits or styles that you’d like to see, I’m taking requests, she said. Or would you rather see me nude? That would certainly make it easier for you to enjoy this lovely body of mine.

“I’m fine with anything as long as you wear some clothes!” Akira cried, slightly flustered again by her seductive tone. “Why are you so obsessed with getting naked?!”

I thought you might have an easier time avoiding honey traps later if you started getting used to it now. Doesn’t that sound like valuable training?

Akira suspected that he would be in for a world of trouble if he said yes. “No one’s gonna try that stuff on a kid like me,” he replied sullenly with a forced smile, both to avoid giving a straight answer and to mask his embarrassment.

Maybe not now, Alpha argued, determined to leave Akira with no way out, but I’m sure there are any number of people who would try to snare a wealthy expert hunter. I don’t want those people to trip you up once you

succeed. History is full of men who ruined their lives over women, you know.

"Do you think I could ever be a hunter like that?" Akira asked. He wanted to strike it rich, but he didn't have much faith in his ability to succeed and couldn't help saying so.

You can, Alpha replied with total confidence. You have me to back you up, and I promise to handle everything for you except your will, your motivation, your resolve—that sort of thing falls to you. You'll need to put in the effort to carry that burden, or even I won't be able to help you.

Akira fell silent for a moment, but then his face turned resolute. "Got it," he said. "Will, motivation, and resolve are my burden."

Alpha smiled in delight, satisfied both with Akira's progress and with her own success in molding his intentions.

Chapter 3: The Reward for Mortal Peril

Hunters risked their lives amid the ruins to claim the Old World relics that slumbered within. But what exactly made something a “relic”? Broadly speaking, the word meant anything associated with the extremely advanced science and technology of the Old World. More specifically, it referred to objects produced during the Old World period. These included precision machinery, for example, but even an ordinary cup from the Old World was technically a relic. Naturally, the former would bring more money to the hunter who retrieved it, but most hunters were unable to tell the difference and so carried back whatever caught their eyes for appraisal and sale.

As a general rule, the more valuable relics were those that could not easily be replicated at the current level of technology, but it wasn’t always obvious how valuable a relic would be at a glance. What appeared to be a cheap accessory or everyday utensil sometimes turned out to possess extraordinary properties. As impossible as it seemed, a small knife discovered in one ruin could slice easily through steel and concrete, to say nothing of meat or fish, with the slightest pressure—but it would never cut a human no matter how hard it was pressed against the skin. And no matter how many steel blocks it cut through, it also maintained its edge perfectly. Its blade neither rusted in water nor reacted when immersed in strong acids like aqua regia. When corporate researchers had removed what seemed to be the knife’s safety mechanism, it had cleaved a tank—and the workers inside it—that stood clearly out of reach of the blade. The knife itself had then immediately crumbled into dust.

The science and technology of Akira’s day was built from analyzing many similar finds. But even skilled researchers, with lifetimes of accumulated wisdom, had only made sense of a small fraction of Old World relics. It was because relics were hardly understood that they could trade at such high prices. And countless hunters—Akira among them—were heading to the ruins for another day of risking their lives to find more.

By the time that Akira had recovered from nearly getting killed and the discouragement that followed, the artillery fire outside had long been silent. Since the boy seemed to be doing better, Alpha decided to resume their expedition.

It sounds like things have calmed down, she said. What do you say we get back to work, Akira? And please be careful this time.

“I will be.” Akira nodded, serious. “I’ll do exactly what you tell me to. I promise.”

Good. Let’s get going. Alpha gave Akira a satisfied smile. She took the lead as they walked, while Akira followed her with an intense look. They exited the building and crossed the area where they had encountered the

giant machine, passing by collapsed buildings and clambering over rubble as they made their way past the scars of the ordeal.

Akira's experience had strongly affected him, both for better and for worse. His expression hardened, now that he knew that invisible machines roamed the ruins—monsters that could defy even anti-monster weaponry, let alone his cheap handgun. But he conquered his fear with resolve and pressed cautiously on, convinced that he would be safe as long as he obeyed Alpha. She was pleased to observe his attitude as she continued to guide him through the ruins, avoiding the threats that lurked there with extraordinary precision.

Before long, they had left the outskirts and reached a deeper area of the ruins.

Akira. Alpha pointed to one of the many buildings. *We'll find some relics here.*

Akira looked up at the forlorn edifice with interest. Having come this far, he couldn't help but look forward to a haul that would justify his risks. But the building appeared much the same as the others he had passed, with no sign that it would be worth his trip.

"Do you mind if I ask why you picked this place?" Akira asked without thinking, then nervously wondered if Alpha thought he was doubting her again.

Alpha, however, just grinned confidently. *Not at all,* she said. *I'll explain while you search for relics inside.* Her demeanor convinced Akira that he could expect to find a great treasure, and he eagerly followed her inside.

The building Alpha had pointed out had at one time been an Old World shopping center. Akira glimpsed the shadows of former prosperity as he made his way past crushed shelves that stood near gaping walls, over floors littered with scratches and the remains of mechanical monsters. Fragments of human bones and gear lay beside the skeletons of organic behemoths. Numerous relics testified to the place's glorious past, when it had been packed with a dazzling variety of wares, and Akira gazed upon the aftermath of the battles between the many hunters who had come seeking them and the hordes of monsters. Surviving Old World structures tended to be sturdy, so the holes in the walls and scorch marks on the ceilings stood as a monument to the fierce ravages of the conflict.

The plentiful bodies scattered around proved that this place had been worth taking risks for, but they also depicted the end in store for those unable to resist the lure of Old World relics.

You asked why I chose this place, Alpha said. First of all, it's safe. Most of the mechanical monsters in the ruins are security systems for some facility or other, and their duties often include eliminating organic monsters. So you're in less danger from organic monsters inside guarded facilities.

"But doesn't that just mean mechanical monsters will attack me instead?" Akira asked.

In fact, mechanical security systems patrolled that building as well, although they hadn't encountered any thanks to Alpha's precise guidance. Mechanical monsters usually stick to set patrol routes and guard posts, she explained. That makes them much easier to avoid as long as you know their patrol patterns. Organic monsters, on the other hand, can change their movements to respond to new situations and make a lot of spur-of-the-moment decisions, which makes them difficult to predict. So, as long as you're with me, you'll be safer in areas with a greater proportion of mechanical monsters.

Akira listened attentively—he'd never heard this in the back alleys of the slums. "I see. I never thought of it that way. But how do you find out those patterns?"

There are a number of ways, but I won't bother going over them. It would take decades to explain them well enough for you to really understand. Alpha flashed a bold and mischievous grin. Or would you rather take the time? I did agree to answer your questions until you're satisfied, so I wouldn't mind telling you.

"Oh, no. I'll pass." Akira winced. He took Alpha's response as a joke and assumed that she had never planned to tell him—but he also suspected that, if he teased her by insisting on an answer, she might really begin an interminable explanation.

Alpha smiled. She had anticipated his response. Really? Well, let me know if you change your mind. Now, as to why I chose this place, the other reason is that I have carefully selected the relics you'll be collecting.

"You did? Are the relics here worth a lot, then?"

The relics' value is important, but not as much as whether you can carry them back with you. Finding a fortune won't do you any good if it weighs ten tons. And on the other hand, you couldn't retrieve a relic lying right next to a monster even if it were small enough to hold in your hand.

"That makes sense."

So I went looking for a place where you are likely to find valuable relics that even you could carry back, and I decided that this one was the best match.

That satisfied Akira's curiosity on one point, but it also sparked another question. "Hang on," he said. "Does that mean the place I was searching yesterday really is picked clean?"

It's been depleted of relics, Alpha confirmed. That area would have been swarming with hunters if it still had anything valuable lying around where even a child like you could find it. Am I wrong?

"I guess not." The thought that he had risked his life for nothing the day before made Akira feel belatedly fatigued. "I figured that I'd turn up something good if I dared the ruins, but I guess I wasn't thinking straight."

You would never have met me otherwise, so I'd say your risk paid off. Alpha smiled encouragingly. You'll have plenty of chances to appreciate just how lucky you were in the days ahead.

Akira chuckled, his spirits evidently restored. “Good point,” he said. “I can hardly wait.”

I won’t let you down. Alpha beamed with confidence.

In truth, the outskirts of the ruins still held a smattering of low-value relics for anyone who cared to search for them. While they weren’t worth enough to interest the average hunter, they would have easily satisfied a child from the slums. In other words, Akira hadn’t really been wasting his time after all. And Alpha was fully aware of this as she led him deeper into the ruins.

◆

Hunters were not the only visitors to the ruins. Corporations invested immense sums into expeditions, and many others searched for relics as well. They would keep going, sometimes cooperating and other times fighting, until each party concluded that it was no longer worth the effort.

Everyone had different standards for deciding when they were done with a ruin. The corporations would pull out first. They spent lavishly on their private militaries, and their soldiers were extremely well equipped and highly skilled. The financial cost of lost personnel was therefore equally extreme. So corporations quickly gave up on any relics except those that could not otherwise be obtained, such as Old World manufacturing equipment that could not be reproduced in the present day. Corporations might engage in armed conflicts over such rare finds; ordinary relics they could simply purchase from hunters. Affluent organizations preferred to settle things with money whenever possible.

Ordinary hunters would be the next to withdraw. They objectively assessed their potential profits from relics against the threat posed by monsters, weighed the pros and cons, and left while the odds were still in their favor.

The last to go would be the incredibly skilled, who continued to fend off monsters while gathering relics until there were none left, and the incredibly unskilled, who stayed too long out of greed and ended up dead.

In that way, the ruins were continually stripped of relics while dead bodies piled up in their place. At a certain point, everyone would compare the quantity of relics discovered to the quantity of bodies left and decide that a ruin wasn’t worth their time. Then, finally, it would become deserted.

The onetime shopping center Akira was exploring still contained more than a few relics of value, proof that even fully armed hunters found the area too dangerous to be worth their while. He had entered a zone crawling with powerful monsters—one which, under normal circumstances, he would never have been able to reach.

Akira, of course, knew nothing about the value of relics. He was merely following Alpha’s directions and stuffing whatever seemed promising into a paper bag. Even that bag was one of his finds—the one that he had brought with him had torn under the weight of his haul.

“Are you sure this will hold up all the way back to the city?” he asked, nervously eyeing the shopping bag that held his finds. It was made of thin paper and seemed far from sturdy.

Don’t worry, Alpha assured him. That bag was made in the Old World, a relic in its own right. It’s a lot stronger than it looks.

“Huh. So, it’s Old World tech. Cool.”

Akira turned his attention to the inside of the bag, packed with relics that Alpha had carefully selected: one knife with its sheath, a few machine parts of unknown use, several packages that Alpha had told him contained medicine for injuries, something that looked like a bandage, something else that resembled a wristwatch, and so on. They were all small objects because Alpha rejected anything too bulky or heavy for a child like Akira to carry.

Akira absentmindedly drew the knife from the bag and held it. It looked ordinary, like a knife that he might see on display in a street stall. He removed the sheath to reveal a rounded blade that seemed anything but sharp.

“You’re sure this knife is from the Old World?” he asked. “Is there anything special about it? It doesn’t look like much to me.”

It should be fairly useful for cutting things, Alpha replied. It has a safety mechanism, but I’d be careful how I handled it if I were you.

“Got it.” Akira stowed the knife in the bag, which still had room for more relics and wasn’t particularly heavy. Having come all this way, he was anxious to return with as much as he could carry. “It’s not full yet. Shouldn’t I grab a few more?”

Alpha shook her head. No, that’s your limit, she said. You’ll have to run with it if we encounter any monsters on the way back, so anything bulky or heavy enough to slow you down will get you killed. Don’t get greedy.

Akira did value his life, and he had determined to obey Alpha. Regretfully, he nodded in agreement and gave up his search. “Got it. So, how much am I going to get for all this?”

I can’t be certain of that either. The going rate for relics fluctuates with demand. And you won’t be selling all of those. Set the knife aside for yourself, and I’d advise against selling the medicine as well. Even minor injuries often lead to serious trouble without proper treatment. Think of it as insurance.

“That’ll mean even less to sell.”

You’ll have to put up with that; it’s a necessary expense.

Akira hesitated, then agreed. “Fine.” He still regretted that he wouldn’t be able to sell as many relics, but he told himself that what remained was still plenty for someone like himself. He turned his attention elsewhere.

Now, let’s start back, Alpha said. You’ll be carrying a decent weight this time, so be especially careful. If you get spotted because that bag slows you down, you really will be blown to smithereens this time. She smiled ominously, prompting a grimace from Akira.

“I… I’ll be fine.”

“Then let’s go.”

Once more Akira followed Alpha nervously. For her part, Alpha wore a cheerful grin.

Akira had made it back to the desert—dangerous in its own right, but still far safer than ruins patrolled by invisible monsters. Unconsciously, he made a mental note marking an end to his expedition and relaxed, though he certainly wasn’t safe yet. As he did so, the fatigue that he had forgotten in his keyed-up state came rushing back, and he let out a sigh.

We could stop for a rest if you’re tired, Alpha suggested. You don’t have to worry about keeping a lookout while I’m around.

“Good idea,” he answered. “But let’s not make it too long; I want to get back to the city as soon as I can.”

All right. Would you like to chat in the meantime?

Akira’s solitary alley life left him with nothing to contribute, so Alpha ended up doing most of the talking, while he encouraged her with the occasional remark.

By the way, she said, did you know that Kugamayama City was founded to explore the Kuzusuhara Town Ruins?

“Really? I had no idea. You sure know a lot.”

I may not look it, but I’m quite well informed. That said, most of my knowledge is about the East. I can’t tell you much about the West or Central.

“The West, huh? I don’t know much about it either, but I hear it’s like another world.”

I only know a few stories. Some say that it lacks any higher technology whatsoever and others that it’s inhabited by wizards, but you have to take those with a grain of salt.

“Central’s full of organizations called, um…countries? Have I got that right?”

So I hear. “The East” is everything east of Central, although it can also mean the area that the ELGC—the Eastern League of Governing Corporations—controls. Are you interested in Central, Akira?

“Nah. I want to know all I should about the East first. I mean, I can’t even read yet.”

Leave that to me. I’ll add a basic education to your training regime in addition to literacy.

“Y-You will? Thanks.” Akira felt grateful for Alpha’s generous offer, but it also frightened him a bit. He firmly believed that a free gift could cost a lot.

You’re welcome. Alpha turned a kind smile on him. Her happiness, however, was all for herself.

◆

Back in Kugamayama, Akira made straight for the local exchange. The Hunter Office maintained several such posts throughout the city, and their clientele varied by district. The exchanges within the walls dealt primarily

with elite hunters whose valuable finds occasionally sparked corporate bidding wars, driving their astronomical prices still higher. The one Akira visited—in the lower district, near to the slums—mostly served a mix of rookie hunters and slum dwellers, and it only attracted the cheapest relics. Although the exchanges theoretically dealt exclusively in relics, this least prestigious branch had, over time, begun to purchase other commodities—although generally at low prices—and had become a vital source of income for the local residents.

Akira entered the exchange and removed the relics he was selling from their paper bag. Placing them on a tray, he joined a line to wait his turn at the counter. He had taken Alpha's advice and kept the knife and medical supplies for himself. Nojima, the middle-aged man running the exchange counter, sized up Akira as a street urchin and was treating him accordingly—until he realized that the objects on the boy's tray could not have come from the slums.

"Show your hunter ID if you've got one," he said, suddenly all business.

Akira produced the scrap of paper that passed for his ID. Nojima took it, entered some data at a nearby terminal, and then handed it back along with three coins. The tray and the relics on it ended up on a shelf behind the official. Akira looked at his coins in his hand, each worth one hundred aurum.

The aurum was a corporate currency issued by Sakashita Heavy Industries, one of the five major businesses that made up the ELGC. As such, the aurum was used mainly within SHI's economic sphere of influence, which included Kugamayama City. The value of three hundred aurum was relative—it would purchase a single cheap meal for an average resident of Kugamayama's lower district, while in the elite district it was pocket change that wouldn't even buy a glass of water. And the three hundred aurum on Akira's palm was the fruit of his death-defying trek into the ruins, his reward for braving the attacks of a behemoth to retrieve relics that he could never have reached without Alpha's support—and only barely had done so with it.

The boy stared at the measly three coins with intense dissatisfaction, then looked up to meet Nojima's gaze with a frown, ready to protest, although he wasn't even sure what to say. But the official had expected his reaction and didn't give him the chance.

"I'm sure you've got your share of complaints," he said with a businesslike expression and a tone of caution, "but you're a rank-one hunter with no credibility and no track record, and this is your first sale, so your fee is fixed at three hundred aurum. If anything, you should be grateful that we're willing to pay you that much pre-appraisal for what might turn out to be junk."

Akira understood the man's point, and part of him even agreed, but that did nothing to soften his scowl. He realized that it would be pointless to argue, however.

“We’ll finish appraising your goods tomorrow at the earliest,” Nojima continued, observing Akira’s attitude. “Once that’s done, we’ll add whatever we still owe you to your next fee—unless the appraisal value is under three hundred aurum, in which case you’ll pay us the difference. So if you’re confident that you brought in something worth a lot, come back and sell us something else. We’ll recognize you by your hunter ID, so if you lose that, expect to lose your trust and reputation with it. Any questions?”

“So I should come back tomorrow?” Akira asked, uncertain.

“Only if the appraisal’s finished, and the more a relic is worth, the longer that takes. And even then, only if you’ve got something else to exchange. You won’t get paid for your last find until you sell us your next one, so don’t show up empty-handed.” A hint of concern showed through Nojima’s no-nonsense attitude. He had seen many children like Akira show up at the exchange with hard-won relics, but few of them ever returned to make a second sale, and only a handful of those lasted to their tenth. The rest either gave up on hunting or died.

“I don’t know how many risks you ran today, but if you want to earn your living as a hunter, you’ll have to keep running them. If this was enough to break your spirit, give up. You’ll just get yourself killed.”

“No thanks,” Akira shot back at once. “I could die just as easily in the slums. I’m gonna claw my way out.”

Nojima grinned. That sounded to him like determination—and determination gave people strength, making their survival more likely. “Is that so?” he said. “Well, take care out there.”

The thought that this kid might make it lifted Nojima’s spirits as he moved on to his next customer.

Outside the exchange, Akira stared hard once more at the three hundred aurum in his hand. He’d made his peace with his payment for the time being, but he still wasn’t happy about it. He sighed, releasing his discouragement, then shoved the small coins—his reward for mortal peril—into his pocket.

Alpha smiled encouragingly at him. Don’t worry, she said. The rest of your payment is a little delayed, but it will be worth the wait.

Akira collected himself and nodded emphatically. “Yeah, you’re right. No way am I gonna let a little thing like this get to me.” He forced himself to focus on what came next. “Alpha, I’m going back to the ruins tomorrow. That okay with you?”

Of course.

Turning in early after a day of adventure, awaking refreshed for the next day’s relic hunting: Akira would have liked nothing better just then. But his plan to return to the ruin ended up being put on hold: as Akira set off toward the alley where he made his bed, some other residents of the slums pounced on him in the back streets. They had been watching the exchange and wagered that anyone who brought something to sell would be leaving

with cash. And they fought with the boy to the death for a mere three hundred aurum.

In the end, Akira won, but he took a bullet to the gut—usually a fatal injury. He only escaped dying thanks to the medicine he'd found in the ruins, which proved so shockingly effective that it restored him to perfect condition after a single day of rest.

Despite this grim reminder that he was still barely strong enough to survive the slums, Akira returned to the ruins freshly determined to succeed as a hunter.

Chapter 4: Ghost of the Old World

After a day spent recovering, Akira got up the next morning and once again made his way into the Kuzusuhara Town Ruins. Today he followed Alpha's directions faithfully—he wouldn't repeat his past mistakes!

Alpha lit up when she observed his attitude and obedience. *I see your injury isn't bothering you,* she remarked.

"Nope, although I don't really get why. I only rested for a day, but I feel better than ever—even better than before I got shot. It's almost scary."

Akira felt in peak condition: free of fatigue, and even more aware than usual. Energy surged through him all the way to his fingertips, and he had no trouble making his way through the ruins, even when he needed to do things like scale mountains of debris. He found it difficult to believe that he'd suffered a gunshot wound so recently.

That's most likely an effect of the medicine, Alpha told him casually.

"What do you mean? I couldn't believe how quick the bullet hole closed up, but what's that got to do with me feeling better than before I got it?"

I upped your dosage, just to be safe. I'm guessing that it healed more than just your gunshot wound.

"Like what? That was the only injury I had." Akira felt increasingly bewildered, but Alpha's smile never faltered.

Remember everything you told me about your life yesterday? she explained. Based on that, I'd say that you were dealing with a lot of accumulated stress—down to the cellular level—from years of harsh living.

Akira looked doubtful at first. "I know life in the back alleys is rough, but you've gotta be blowing it out of proportion. I mean, I was always able to get around normally before."

But as Alpha explained just how much long-term malnutrition and other conditions of life in the slums could damage him, Akira's face grew increasingly anxious.

"You mean," he said at last, "that I've been barely alive this whole time?"

Alpha looked a little smug. And all this time, you thought this was normal. Aren't you glad that's behind you?

Akira frowned. A tangle of emotions churned in his heart, and he felt that he couldn't simply dismiss the harshness of his daily life the way that she had. Yet for the moment he tamped down on those sensations. Just now, his focus was on following orders and forging ahead. Another time would be better, he told himself, for sorting through the countless details nagging at the back of his mind. Once he started paying attention to them, they might bury him beneath an avalanche of doubts and misgivings.

Their journey into the ruins seemed to go more smoothly this time, at least from Akira's point of view. They encountered no monsters, and Alpha's directions seemed reasonable this time. Nothing indicated any dangers

lurking nearby, and he was following her instructions, so Akira began to feel more at ease.

Eventually, his thoughts turned to things other than the deadly world they picked their way through. Something had been bothering him for some time. Though normally quiet while exploring the ruins, at last Akira broke the silence.

"Hey, Alpha, can I ask you something?"

You may. Anything you want to know.

"Why are you dressed like that?"

Alpha's all-white dress billowed with dazzling frills along the sleeves and hem. *Oh, does this outfit look that bad on me?* she asked. *Or was that an invitation to change into something more to your taste?* She twirled theatrically and gave a seductive grin. As she did so, layers of fabric swirled. Her long, gleaming hair swept in an arc. In a moment, her bare back vanished, and her daringly low-cut neckline faced him.

What Akira actually wanted to know was why Alpha was dressed in a way completely inappropriate for a trip to the ruins, but so bewitching did she seem that he forgot his question and answered her own.

"No, I think you look great in that. Still, since you ask, I liked what you had on when we met better." Old World clothing carried an exotic aura, and the shock of their first meeting had made Akira feel fond of the first outfit he had seen her wear.

What I had on when we met? Alpha repeated innocently, knowing full well what Akira meant. *Ah, you mean nothing!* The dazzling fabric vanished, once again unveiling her artistic and enchanting curves—to Akira's consternation.

"No!" he cried. "The clothes you put on after that! Change back! What have you got against clothes?!"

Alpha grinned and reverted to her dress. You really must be a child if my precisely calculated and meticulously designed body doesn't intrigue you, she taunted. I suppose food seems more interesting than girls at your age.

"That's right," Akira stubbornly agreed. "I *am* a child, and I care more about food because I'll starve if I don't earn my living." Then he casually added, "So what are you wearing that for?"

Since Alpha had already explained why she was naked when they met, he supposed she might have a reason for her present outlandish attire as well. Still, he wasn't burning with curiosity and was ready to let the matter go if Alpha wasn't going to take it seriously.

Alpha, however, dropped her teasing manner, although she remained smiling. Do you remember what I told you about my appearance? she began, a businesslike note entering her voice. It's a type of augmented reality. A lot of Old World facilities broadcast AR signals, and I hijack their systems to transmit mine over a wide area.

Akira couldn't guess why Alpha was telling him this, but he adopted her sober attitude.

You can pick up that data directly and even hold a conversation with me, and anyone with the right equipment can at least see me. Alpha's expression turned graver. So, as I mentioned before, I dress to get a reaction from anyone who can see me so that I can identify them quickly.

"I remember all that, but why are you still…?" Akira broke off, and his face grew tense. "Does that mean someone with that equipment is nearby? Watching us?"

The smile vanished from Alpha's face altogether. It does. Don't look back. They've been tailing you this whole time, and they're still watching from a considerable distance behind.

Seeing Alpha's expression, Akira realized how dire his situation was, and his face grew grim with horror.

◆

From far off, Kwahom and Hahya kept an eye on Akira. The two hunters were no rookies, roaming as they did far beyond the outskirts of Kuzusuhara. Hahya's body was partially mechanized and his eyes resembled cameras, while Kwahom was fully organic but kitted out with an array of armaments adapted to the desert wasteland. No amateur hunter could pick them out at this distance, but the two hunters could see Akira just fine—Hahya through the telescopic function of his augmented eyes, while Kwahom held a pair of binoculars.

"That brat's going a long way in, considering he might as well be unarmed," Kwahom remarked, suspicious. "It's suicide. What's he thinking?"

"Nothing—he's just a moron." Hahya laughed off his partner's doubts. "It's because he's so dumb that he found those relics, since every hunter around here knows there's nothing good left on the outskirts. Let's cut to the chase and make him cough up where he found that haul."

"Hey, that was my idea," Kwahom grumbled. "You stopped me 'cause you were worried about offing him by accident before he talks, remember?"

"Come on." Hahya grinned, relaxed. "How was I supposed to know he'd go this deep into the ruins? Don't pretend you weren't expecting him to head somewhere in the outskirts or into one of these run-down buildings too."

"You've got me there. Who'd guess that some punk kid from the slums would make it back alive from this deep in the ruins? This area's no cakewalk, and even we'd have trouble a little deeper in."

"Exactly, so chill out."

It wasn't mere curiosity that had brought them here. They had heard that a barely armed slum child had turned up at the exchange with a load of valuable relics. Most local hunters figured there was nothing worthwhile left on the Kuzusuhara outskirts, but they all knew that fresh discoveries were possible—treasure troves of relics might still rest buried under rubble or in otherwise inaccessible places. At times, reportedly, monster attacks happened to punch holes into previously inaccessible storehouses, or people

stumbled into the entrances of well-concealed buildings. Not often enough to make a living off such discoveries, but when one occurred it usually attracted a fresh wave of hunters to a previously abandoned ruin.

If a cache of relics proved too large for its finder to retrieve in a single trip, the remainder naturally belonged to whomever claimed it first. So a fair number of hunters—Kwahom and Hahya included—kept their ears to the ground. Hearing rumors of a firefight over a street urchin's payment from the exchange, the pair had asked around and found the stories credible. That meant valuable relics were lying around somewhere that a child could reach safely, and their money was on the Kuzusuhara outskirts as the only such spot near Kugamayama. They also wagered that if that child had chanced on a cache that still held more relics, he would make a return trip in the near future. So they had decided to take the rest of the haul for themselves. And after lying in wait in the ruins, their eyes peeled for children, they had spotted Akira.

Kwahom's plan had been to capture Akira and make him give up the location of his find, but Hahya had objected that they didn't want to risk killing him if he fought back, so Kwahom had suggested shadowing the boy instead. Now he regretted it.

"Hahya," he said, "it's not too late to grab the brat and make him talk. He's not even decently armed, so keeping him alive will be easy as long as we're careful. Don't you want to get this over with?"

Hahya didn't answer.

"Hey, what's up?" Kwahom asked, puzzled.

At length, Hahya whispered, "The kid *is* alone, isn't he?"

"Of course he is, and it doesn't look like anyone else is hiding around here to me." Kwahom gave Akira and his surroundings another scan through his trusty binoculars. A high-performance set, it could display distant objects at high resolutions, make midnight look like midday, detect radiation to bypass basic active camouflage, and even identify and highlight people and monsters. Most binoculars in this class also boasted network functionality to receive and display AR data broadcast by the ruins, but not these. Once, Kwahom had encountered a mechanical monster that used network features to erase itself from his display, and that close brush with death had taught him to use binoculars that relied exclusively on local processing ever since.

"No one," he reported. "No monsters either. Just the brat."

"Oh, well," Hahya responded hesitantly with a slight frown. "Look, just to be clear, I'm not high, I'm not drunk, and I'm not messing with you."

"Just spit it out. What's got you freakin' out?"

Reluctantly, Hahya confessed, "I see a woman next to that kid."

"A woman?" Kwahom took another uncertain look through his binoculars. "No, it's just the kid. No woman in sight."

The color drained from Hahya's face. "You can't see her?" he asked. "I can. A real babe's been leading that boy around this whole time."

“Tell me what she looks like, then. And don’t skimp on the details.”

“She’s wearing a white dress. It looks pricey.”

“A dress?” Kwahom was incredulous. “You *do* remember we’re in the ruins, right?”

“It’s true!” Hahya shouted, losing his cool. “Believe me! I’m not drunk, and I’m not seeing things! Not even I’m dumb enough to drink or get high before heading out here!”

Kwahom was convinced that his partner wasn’t lying, but he still couldn’t see any woman, and that puzzled him. At length, he hit upon a possible explanation.

“Hahya, your eye implants support AR, right?”

“Yeah. I had them transplanted from a guy who bragged about how much he spent on them. He wouldn’t shut up about their network features, but that didn’t stop him winding up dead in the ruins. They’re high-spec and pretty handy, but they do pick up signals and bring up overlays on their own sometimes.”

“That’s what you get for messing with unauthorized parts. They probably started out as loot off a corpse in some ruin, and I’ll bet the last guy who bought them bit the dust because they went haywire and messed with his vision or something.”

“Give it a rest. I got ’em installed cheap, and they’re a big help looking for relics. I just can’t switch things on and off as easily as I’d like ’cause that guy lost the control mechanism along with a chunk of his head. I’ve been putting off replacing it because that’ll be pricey. And why do *you* suddenly want to know about this, anyway?”

Kwahom’s expression turned serious. “That woman might be a guidance system for these ruins,” he said. “If I can’t see her, and you can, then she’s an AR display, not a hologram. Maybe part of these ruins is still online and sending out weird signals that your implants are picking up. One of those ‘ghosts of the Old World.’”

Startled, Hahya took a closer look at Alpha. She seemed so real that he would have laughed off Kwahom’s suggestion as a joke if his partner hadn’t been so earnest. “Are you sure? She looks human to me—she even casts a shadow. AR usually looks off somehow—missing shadows, wonky perspective, clipping into walls, that kind of thing—but the only unnatural thing about her is that getup. Though that’s weird in itself.”

“If that woman is part of a guidance system for the Kuzusuhara Town Ruins,” Kwahom continued, “then the Old World tech that’s displaying her would be too advanced to leave those kinds of tells.”

“Oh, yeah, that makes sense. So that’s a ghost of the Old World. I’ve never seen one before, but she’s really something else.” Hahya scrutinized Alpha. Now that his partner had provided a convincing explanation for her, Hahya’s fear had turned into curiosity.

“That reminds me of a story about these ruins,” Kwahom interjected. “I think they call it...‘The Alluring Specter.’”

“I’ve heard that one. The Specter baits hunters deep into the ruins with relics and then murders them, right? Lots fall for it, but none make it back alive. And the dead hunters want company, so they come back to lure the living. They say the Specter can look like anybody—man or woman, old or young. I’ve even heard recently about it turning into a dog or cat—whatever it takes to trick people.”

Kwahom nodded and assumed an air of authority. “Hunters dying chasing relics is nothing new. But how can there be stories about the Specter if no one who sees it lives to tell them?”

Hahya considered. “I never thought of that. How?”

“Because some don’t follow the Specter—that is, people who can’t see it. Only the few who can see it follow, and no one else knows what to make of these tales. That’s why it turned into a ghost story.”

“Y-You mean following that woman will get us killed too?” Hahya suddenly felt on edge.

Kwahom flashed a sly smile. “Perhaps, but ask yourself—why was that brat able to find valuable artifacts? Because he can see that woman just like you can. She’s part of an Old World system for urban management—still mostly operational—and she provides guidance to anyone who can see her. The brat asked her where to find relics, and she led him to some without any monsters spotting him. What do you think? Make sense?”

“Yeah!” Hahya exclaimed, upbeat once more. But then another thought occurred to him. “Hang on. People wouldn’t tell ghost stories about her if the routes she showed were safe.”

“I’m guessing she just makes it easier to avoid monsters,” Kwahom cajoled him. “They’ll still find you sometimes. And hey, some hunters who learned about her might’ve spread rumors that she lures people to their deaths so that no one else would follow her. After enough trips, they’d exhaust the relics on the outskirts, and she’d start leading people deeper into the ruins. Some of those would have unlucky run-ins with the tough monsters farther in and wind up dead, just like the rumors said they would. Once that happens enough times, you’ve got your ghost stories.”

“So that’s it!” Hahya grinned in delight. “In that case, we’ll be fine! We won’t die anywhere that kid survived as long as we keep our guards up!”

“Well, there’s no guarantee that I’m right, but if I am, we’ve stumbled on a handy way to pinpoint relics. Still, it’s a rumor with a body count, so it’s not exactly risk-free.”

Kwahom’s attempts to curb Hahya’s enthusiasm fell on deaf ears. The allure of a safe shortcut to the relics in the ruins would’ve seduced many a hunter.

“Worrywart!” Hahya exclaimed. “We’ll be fine. Come on, this is too good to pass up!”

“Well, let’s watch a little longer first.”

Kwahom surveyed his partner coolly. It’s also possible that teams of hunters fell out and killed each other to keep the secret to themselves, he

thought. Then the survivors—who could see the Specter—blamed it for their partners' deaths. Of course, this numbskull won't give me any trouble as long as I gin up some excuse to make him walk in front of me.

Concealing his thoughts from Hahya, Kwahom turned his attention back to Akira.

◆

"Alpha, what are they like?" Akira asked. Ever since Alpha had warned him that they were being followed, he had been unable to hide his nervousness.

Two men. Probably hunters, heavily armed.

"And you're sure they're following me? Any chance they're just curious what a kid's doing in the ruins? Or they just happen to be going the same way we are?"

None. I've been observing their movements for some time, and they maintained a fixed distance even when I had you stop for a while. They're definitely tailing you.

Akira grimaced, but he still clutched at one more straw. "What would they want to do that for? Even if they want to jump me, I'm obviously broke."

Alpha forced him from his wishful thinking back to reality. *They might have been watching the exchange, or even paid an official to tip them off.* Her words, cynical yet plausible, crushed his hopes, and Akira's expression hardened.

I'd say they plan to tail you to your source of relics, then kill you and take it for themselves. I can think of a lot of reasons why they would be your enemies—more than why they wouldn't be, at least. It was Alpha's turn to look grim. Akira, if you don't assume they're hostile, you're going to die.

That finally cured Akira's optimism. First the giant weapon dog, then the colossal machine, and now hunters! He sighed deeply, gritted his teeth, and cursed. "Damn it! Now I've got to watch out for hunters too?!" Akira grabbed his head with his hands.

Akira, go into that building for now. Try to act natural, and don't look at them.

"Got it." As instructed, Akira entered the crumbling edifice and followed Alpha into one of the rooms. There he sat down with his back against a wall, looking even more depressed.

Don't worry, Alpha told him. There are no monsters in here.

"Thanks." Akira didn't respond immediately, and when he did desperation filled his voice. He knew how strong fully equipped hunters were, and he was even more familiar with how vicious they could be when they turned bandit. When hunters like that threw their weight around in the slums, they churned out corpses like a factory of death. He racked his brains for a plan, but nothing came to mind. Every possibility he envisioned ended with his brutal murder one way or another—a no-win scenario.

Akira. Alpha spoke firmly, and when he looked up she dipped her face close to his. He reeled back, struck his head on the wall, and yelped. Fortunately, the pain and surprise knocked the growing fear out of his mind. As he calmed down, Akira's dazed eyes focused on Alpha, who gave him a gentle and reassuring smile. *Stay strong and don't be afraid. You have me to back you up, and I promise I won't let you die.*

"Can we get away?" Akira asked, startled yet hopeful.

Get away? said Alpha. We're going to fight. And turn the tables on them.

Akira's hope gave way to shock and confusion. "We can do that?!" he exclaimed. "It's two on one, and they're fully armed hunters!"

That's nothing, she said confidently, her complacent smile designed to assuage his doubts. You've got me, and I'm enough to tip the odds overwhelmingly in your favor. Remember how you killed that massive weapon dog with just your handgun? As long as you follow my directions exactly, you'll be fine.

"Y-You mean it?" Her matter-of-fact tone almost convinced Akira, but he still hesitated at the vast difference in their firepower. "Hang on. Fighting people ain't like fighting monsters. And if you're that sure of yourself, getting away should be no problem. Wouldn't that be a better idea?"

Akira looked scared, and Alpha looked at him sternly. No, it would not. If you go outside, you'll be at the mercy of their superior weapon range—especially once you reach the wasteland. And even if you escape them today, what about tomorrow or the day after? How long do you plan to keep running? Do you think they'll suddenly turn friendly if you make it back to the city? Or will you run away there too? Can you lose them completely, or will you just keep fleeing until they kill you?

Akira met Alpha's earnest gaze. Silently, his face grew resolute as his unease slipped away. "So turning tail here will just get me killed," he realized, rising to his feet. "Fine. I'm in."

Alpha flashed a gentle but firm smile, which was meant to further bolster his courage. *Get ready, Akira. You'll never be a great hunter if this is too much for you.*

Akira's answering grin was strained, but it carried a hint of pleasure. "Oh, right. Will, motivation, and resolve are my burden." That was his promise to Alpha, forged after disobeying her orders had nearly cost him his life. He had nothing else to contribute to their collaboration—penniless and powerless as he was—so to fail here would make a mockery of their partnership. His desire to keep his promise to her fired up his determination. Will, motivation, and resolve. He could handle those.

Leave everything else to me, Alpha reassured him. Behold just what my incredible support can do for you!

"Thanks. I'm putting my life in your hands."

Akira's firm reply appeared to satisfy Alpha. She grinned sardonically. Still, I didn't expect this to happen so soon. You really must have used up all your luck just to meet me.

Akira returned her look. “I’m starting to think so too.”

Don’t worry, she continued, though her voice sounded a bit anxious. *I am the only luck you need.*

“Thanks,” Akira glibly replied. “I owe you one.”

And don’t you forget it, said Alpha with equal nonchalance. Her smile, though simply the product of countless computations, was entrancing; it calmed Akira’s nerves, strengthened his will, and restored his courage—just as she had meant it to.

◆

As Akira entered the building, something felt off to Kwahom. Knowing a ghost was nearby made him cautious.

“The brat’s on the move,” he said. “Hahya, what about the woman? Did it look like she was leading him in there?”

“Yeah. She pointed to that building and then went in ahead of the kid. That might be where the relics are. So, what now? Do we follow?”

Kwahom hesitated. “No. Let’s wait a while.”

“You sure? What if we lose him?”

“Not a problem. We know what he looks like, so even if we lose him here, we can probably track him down in the slums. Safety first—if he comes out of there in one piece, we’ll know the coast is clear.”

“Oh, come on. What’s got you acting so scared?” Hahya looked glum over Kwahom’s apparent lack of enthusiasm. As he could see Alpha, he felt less anxious, and he definitely didn’t want to lose this opportunity.

Kwahom tried to needle him. “Charge in there alone if you don’t like it. You’re the one who can see the Specter, and if the stories are true, that means you’ll be the one to die.”

Hahya laughed dismissively. “Don’t be like that. I know the drill.”

The two men kept watch for a while, long enough for Akira to make a basic search of the structure. But when he still failed to reappear, Kwahom grew impatient as well.

“Still no sign of the brat,” he grumbled. “Think he’s dead? Or just taking his time checking the place?”

Hahya was raring to go. “Come on, Kwahom,” he urged. “Let’s go and find out already. If the kid’s dead, any more waiting is a waste of our time.”

“Fine, but the monsters around here are no pushovers. Don’t let your guard down just because we might get a good haul out of this.”

“Yeah, yeah. I know.”

Hahya took the lead. Behind him, Kwahom glared at his excited companion. Annoyed as he was that Hahya seemed inclined to ignore his warnings, he also felt a growing anxiety.

Kwahom halted just inside the doorway. “Hahya, I’ll keep watch here to make sure the kid doesn’t leave. You search inside and call me if you find him or the woman, or if you run into a monster, or if anything else happens. Come back after one hour regardless.”

“Got it. What should I do if I find the brat? Bring him back here?”

“Suit yourself. Kill him right away or rough him up to make him talk—it’s your call. But remember: don’t—*don’t*—let your guard down. And stay in contact, or that ghost story is going to have a sequel with you as the main corpse. Got that?”

“Yeah, I already told you.” Hahya gave Kwahom a complacent smile, then practically skipped into the building.

Sorry, Kwahom thought with a wry grin as he watched the other man go, but I can’t shake the feeling that this is all a setup, and I can’t be sure you won’t turn on me if you find a big stash of relics either. And folks wouldn’t talk about this Specter if there weren’t a body count behind it. Good luck, but for now I’m gonna watch and wait and pray that I’m worried for nothin’.

◆

Thanks to Alpha’s scolding and encouragement, Akira’s fear had given way to determination. To prepare himself for combat, he purged any thought of flight and concentrated on attacking, breathing deeply to calm his nerves and focus his mind.

Alpha had already outlined her plan, confidently assuring him that he would win so long as he did as she told him. Akira believed her, and not without reason—his memory of his encounter with the large weapon dog and his promise to trust Alpha’s guidance were fresh in his mind.

Akira, they’ve entered the building, she told him. One is securing the entrance while the other searches inside. They’re out for your blood, so show them no mercy.

“Fine,” Akira replied. He briefly wondered how Alpha knew the men’s plans. But he quickly dismissed the question—unnecessary thoughts led to unnecessary actions, which would make his odds of dying skyrocket. Sticking to the plan, he decided, was all he needed to think about right now.

Alpha gave him a flirty grin, calculated to boost his morale. *Let’s begin. Are you ready?*

“Yeah.” Akira nodded firmly. He looked calm and resolute now.

Alpha smiled with satisfaction and vanished from Akira’s view, just as planned. Akira exhaled deeply, steeled himself, and dashed off to the place Alpha had indicated.

◆

As Hahya crept warily through a corridor, he spotted a woman in a dress disappearing around a bend. It was Alpha. Instantly less wary, he almost pursued her in spite of himself. But remembering Kwahom’s emphatic warnings, he held back and switched on his communicator.

“Kwahom. I just spotted the woman.”

“Was the brat with her?”

“No, she was alone at the end of this hallway. I’m about to go after her.”

“Watch out for the brat; he might be close.”

“I know, I know.”

Hahya set off after Alpha. He did keep half an eye out for Akira, but Alpha was walking quickly, and he couldn’t seem to catch up to her. Even

so, he kept her back in view. Frequently, he would pause to carefully scan his surroundings, only following Alpha once he was certain it was safe, and then halt again a short distance later. But he grew bored, relaxing and becoming less cautious.

Every time he looked at Alpha, his gaze lingered longer on her ravishing figure, paying less attention to his environment. Her exceptional beauty and fashion captivated him—her dazzling white dress, the supple skin of her daringly exposed back, the glossy luster of her hair, and the seductive bust and graceful profile that came into view when she turned a corner quickly preoccupied Hahya's mind. Without thinking, he threw caution to the winds and picked up his pace, anxious for a closer look. He had eyes only for her alluring back and buttocks, his face twisted in a vulgar grin and his wariness entirely forgotten.

When Hahya finally overtook Alpha, who had halted against the wall of a corridor, she greeted him with a friendly smile. Her mouth moved as though she were speaking to him, and he strained his ears to catch her words, but he could hear nothing. He frowned, a bit suspicious, but she continued to move her lips with the same cheerful look.

Suddenly, Alpha turned to the side as though something had caught her attention. Hahya followed her gaze but saw nothing remarkable—only a window missing its glass—and his suspicion deepened.

Then gunfire rang out.

From his hiding spot, Akira had leapt out behind Hahya. His first shot passed by Hahya's side, but the hunter—still distracted by Alpha—didn't react. His second shot struck the ground at Hahya's feet. The veteran hunter prepared to return fire, but hesitated—his powerful anti-monster rounds would kill Akira instantly, along with any chance of interrogating him. The third shot did strike Hahya but failed to injure the hunter through his protective suit. At that, Hahya finally responded, firing wildly at Akira with less powerful rounds designed for weak monsters and human targets. Echoes thundered in the corridor as bullets struck the floor, the walls, the ceiling.

Akira narrowly escaped, retreating immediately after his third shot, but he had left bloodstains on the floor. Hahya saw them and grinned. He was about to give chase when Kwahom's voice stopped him in his tracks.

"Hahya. What happened?"

"Nothing. I spotted the brat, so I shot at him, but he got away."

"The first shots I heard didn't sound like yours."

"Oh, well," Hahya hesitated. "It's no big deal. Forget about it."

"Give me the details!"

Hahya grudgingly complied, and he heard Kwahom's anger through the communicator.

"He got the drop on you while you were chasing that woman's ass?! Are you shitting me?!"

"N-No! She really is just that hot!"

Kwahom snorted. “So she’s literally ‘to die for’? No wonder people tell stories about her.” He brushed off Hahya’s frantic excuses and turned to the matter at hand. “So, is the woman still there?”

“Yeah, she’s just standing here. Oh, and she looks like she’s saying something, but I can’t hear her.”

“Sounds like your eyes can only pick up visuals, not audio data. Just to be safe, check if you can touch her. She could be physical but invisible to me—some kind of automaton with active camo that you can see through via the net.”

Hahya reached for Alpha’s ample chest, but he felt nothing. His hand merely passed into the image.

“I can’t touch her,” he reported with evident disappointment. “She’s just a visual after all. Having tits this nice in arm’s reach and not being able to feel ’em is a kind of torture, if you ask me. Hang on—people will pay good money even for a video of a babe this hot. I can see her, so if we bypass the video to—”

“That crap can wait!” Kwahom snapped. “I’ve just about had it with your bullshit. Next, tell her to raise her right hand.”

Hahya did so. At that, Alpha stopped moving her lips and complied.

“Huh?” Hahya said. “She raised her hand just like I told her.”

“Now tell her to point to the nearest person except for you and the kid.”

“What for?”

“Just do it!”

“F-Fine.” Hahya commanded Alpha again, and this time she pointed diagonally down at the floor.

“Hahya. How’d it go?” Kwahom asked. “Did she point toward where I am?”

“Give me a sec. The automap shows you here, and I’m over here, so…” Hahya gave a start, impressed. “Yeah! She’s pointing straight at you! Is that crazy or what?!” Kwahom, on the other hand, responded with an angry curse.

“Shit!”

“Wh-What’s the problem?”

“It’s a setup! That brat was on to us! He must have told her to point out anyone other than him or something! And she’s a decoy! He gave her orders to wander around the building and then move to a specific spot once you spotted her! She lured you into position for him to get the drop on you!”

“Th-That little punk!” Hahya roared, his voice shaking with rage. “He messed with the wrong guy! I’m gonna murder his ass!”

“The woman must be a guide to these ruins or something. She listened to you, so she’ll probably take orders from anyone. Have her lead you to the kid and then kill him. You need backup?”

“I’ve got this! The brat’s only got a handgun and he’s not even a good shot—I can finish him off no problem!”

“Be careful. You wouldn’t have survived that ambush if he’d had a decent gun and known how to use it.”

“I know that. Just keep your eyes peeled and make sure he doesn’t go anywhere.” Hahya then barked a command to Alpha. “Take me to the kid!”

Alpha began to walk again, and he fell into step behind her. For once, her figure failed to captivate him—his anger burned hotter than his lust.

◆

Akira grimaced and pressed a hand over his wound. His swift retreat had saved him from any further injuries, but Hahya’s gunshot would normally have been sufficient to stop the boy in his tracks. Fortunately, Akira had taken a large dose of medicine shortly before attacking the veteran hunter; it continued healing him as he fled, allowing him to do more than just stagger away. As he pressed on, following Alpha’s directions and staining the hallways with his blood, the searing pain yelled at him to stop. He resolutely ignored it and kept going.

Thanks to the medicine, his pain faded rapidly. The injury itself, however, remained far from healed. Frowning, Akira grabbed a handful of powder from his pocket: medical nanomachines, salvaged on his last trip to the ruins and saved for emergencies. One could ingest them, but they were far more effective if applied directly to a wound—and far more painful. Akira had used them after getting shot in the slums, and his agony had been so intense that now he hesitated, even with his life on the line.

Wincing in anticipation, he nonetheless pressed the powder against his injury. The pain felt even worse than he’d imagined, but he gritted his teeth and covered the wound with white medical tape.

“I guess that’s Old World tech for you,” he said, with a strained grin. “No wonder relics sell for so much.”

Just then, Alpha’s voice broke into his musing. I’m sorry. I should have told you to withdraw after two shots, not three.

Akira shook his head. “No, it’s my fault. I should have hit him.”

Though Alpha was invisible to him, her voice had guided him before, during, and following the attack. She had told him how to hide in his enemy’s blind spot, when to leap out into the corridor, how many times to fire, to prioritize speed over accuracy, and to immediately retreat. Akira had obeyed to the best of his ability and succeeded in firing on his defenseless foe from behind—a perfect ambush. Despite his injury, he had no reason to doubt her orders.

Their mistake? Alpha had asked Akira to land at least one shot on Hahya before retreating, to help her gauge his handgun’s effectiveness against the hunter. So Akira had unconsciously attempted to aim—a barely detectable delay. Had he fired three shots without thinking and fled at once, he would have avoided injury. His serious wound demonstrated that even the slightest failures could prove fatal, and his spirits had fallen as a result.

Akira, Alpha called to him, her voice gentle and reassuring. Your target overwhelmingly outclassed you—yet you ambushed him and survived. So be

proud! Hold your head high! What you lack in skill, I'll make up for with training. Leave it to me—I'll whip you into shape until you beg me to stop! She spoke as if Akira's survival were guaranteed, and he began to feel confident once more.

"I guess you're right," he said. He forced a grin to encourage himself. "I'm counting on you."

You won't regret it. And because you did land one hit, our preparations are complete. I've fully analyzed his gear and movement patterns, so we'll be able to kill him next time.

"For real? You sure are something, Alpha!"

I told you I'm high-spec, remember? But you'll need to get extremely close to him, so be prepared for that.

"Got it. And don't worry—I'm ready."

Gritting his teeth, Akira resolved to rise to the occasion. He no longer felt the pain of his bullet wound.

◆

Hahya seethed with anger as he stalked through the building, keeping an eye out for Akira and barely even glancing at Alpha. But without anything to feed his rage, his feelings began to dissipate, and before long he began to abandon caution once again. Following Alpha meant that he couldn't avoid looking at her completely, and he found his gaze returning to her alluring back. He forced himself to look away, but that only made him more keenly aware of her, distracting him from his surroundings and especially from any danger that lay ahead.

Even Hahya recognized the issue. He strove to stay alert, taking his mind off Alpha and scanning the area around him. When he looked forward again, he saw that Alpha had come to a halt at a T junction a short distance ahead and was pointing down one of the corridors.

So, that's where the brat is!

Calculating from Alpha's gesture where Akira must be, Hahya stopped just before the fork. Figuring he would be safely out of sight there, he thrust one arm around the corner and fired blindly. If he unleashed enough bullets, he would be sure to hit Akira even without knowing the boy's exact position.

The gunfire echoed through the building. The rapid hail of bullets struck the floor, walls, and ceiling of the corridor. Countless shots ricocheted every which way, eliminating any and all blind spots. As Hahya stood poised to swap out his empty magazine for a full one, he saw Alpha stop pointing down the corridor. He relaxed, concluding that his quarry must be dead.

"Good. Guess I finished him off." Turning the corner to confirm his kill, he saw only a hallway riddled with bullet holes. His face immediately froze.

"Hey!" Hahya roared, spinning around and striding up to Alpha. "Where the hell is the brat?!"

Alpha merely smiled and moved her lips. Remembering he couldn't hear her, he bellowed, "The kid! Point to that kid!" Alpha pointed behind Hahya, who looked again but still saw no one.

A gunshot! He felt the pain in his gut that told him he'd been hit. As he froze in shock, several more bullets struck him. None were fatal—they failed to penetrate his body armor, as cheap as it was—but they knocked him off his feet. He crumpled to the floor with a cry of pain and lay there in agony, wondering what the hell had just happened.

I've been shot?! Where from?! There are no enemies around here, just that woman! Wait, did she shoot me?! No, that's crazy! She's just an image! She couldn't have!

Hahya grew more and more bewildered, until suddenly the answer appeared before him. Akira stepped out from inside Alpha.

They were layered so I couldn't see him?!

Akira approached Hahya, gripped his gun firmly with both hands, and aimed it steadily at the veteran hunter's forehead. Despite Hahya's searing pain, he managed to point his own weapon at Akira and pull the trigger first. But no bullet emerged—the magazine was empty.

Hahya had rarely needed to think hard about anything, but now, with death looming before his eyes and his life on the line, he couldn't help asking questions. The world seemed to slow down around him as he lay on the point of dying, and the truth began to dawn on him:

Was it all a trap?

In his mind, he saw it all again, but with new clarity: Alpha looked away just before Akira's ambush to distract Hahya from the boy. She halted at an odd place and pointed down the corridor to make him waste ammo. She stopped pointing in order to interrupt him before he replaced his empty magazine. She smiled at him, distracting him with her gorgeous looks. Was it all—her clothing, the route they had taken here, her walking speed, and a litany of other trivial details—designed to lure him to his demise? Such questions contributed nothing to his survival, and so Hahya wasted his last, precious moments on pointless suspicion—and the last of his luck ran out.

"The Alluring Specter…" he muttered through a grin distorted with fear.

An instant later, Hahya died, shot between the eyes by Akira. The last thing he saw was Alpha's cruel smile as she nestled close to Akira.

Kwahom's voice burst from Hahya's communicator. "Hahya. What happened? Did you get the brat?"

Don't answer him, Alpha warned Akira. It would give away too much.

Akira nodded silently.

Now, hurry up and take his gear, she continued. We'll add it to our arsenal.

Hahya's equipment looked awkward on Akira, but it was a sight better than just a handgun.

Next, toss his body out of that window.

Akira started, but Alpha remained smiling, unperturbed.

◆

Down on the first floor, Kwahom tensely racked his brain to figure out what was going on.

He must have fought the kid—I heard the gunfire—but he hasn't made a peep since. Don't tell me he's dead. Did he screw up and stumble into another ambush? No way—even he can't be that stupid.

He hesitated, torn between investigating and withdrawing immediately.

What if this is a setup? How far back did that start? What if leading us to this building was all part of their plan? Or if those relics in the rumors never existed? Maybe this place is that brat's hunting ground, and he's just been luring hunters who can see the woman into this building to murder them and loot their gear and finds. If that's the case, I can't afford to underestimate him. Or am I just overthinking things?

The ghost stories about the ruins heightened Kwahom's wariness, and he leaned toward retreating. Unconsciously, his gaze wandered to the building's exit and the landscape just beyond it.

He saw Hahya's body fall. The corpse struck the ground with a loud thud.

"Hahya?!" Kwahom instinctively ran toward his partner but stopped just short of the doorway.

His gear's been taken. That kid's alive, and he made a point of dumping Hahya's body outside—dumping it here, which means he knows where I am.

Kwahom looked up, his face inflamed with hatred. He saw only the ceiling, but he pictured Akira beyond it, poised to shoot him when he ran to check on Hahya.

"He doesn't know who he's messing with!" If Kwahom had felt any complacency or conceit because his target was a child, that feeling dissipated. He was solely focused now on killing Akira. He pulled out his data terminal and brought up the location of Hahya's on its display. The signal was on the move, showing that Akira was carrying the device.

I knew it. He's upstairs. And if he thinks that he's the only one with tracking on his side, he's got another thing coming.

Grinning faintly, Kwahom dashed off into the building.

◆

With one enemy down, Akira prepared to dispatch the other.

Akira, get out that knife, Alpha instructed him when he arrived at the site of his next ambush. *The one I told you not to sell.*

"This thing?"

It was the knife he had found in the Kuzusuhara Town Ruins. Although its rounded blade appeared almost completely dull, Alpha had told him that it could cut through a wide variety of materials with ease if used properly.

That's the one, Alpha confirmed. Do you see the slight bulge on the bottom of its handle? Shoot that part with your handgun.

Akira placed the knife on the floor, brought the muzzle of his gun near to the bump Alpha indicated, and took careful aim. "Just to be clear," he hesitated, "it's going to break if I shoot it, right?"

Yes, it will. Or just the safety mechanism will, to be precise.

"It kind of seems like a waste. I mean, it's an Old World relic. Wouldn't it sell for a lot if—?"

Consider it a necessary expense. Unless you'd prefer an alternative that would put you in mortal danger three times, that is.

Akira looked at Alpha's undaunted smile, which somehow suggested that she was enjoying herself, and pulled the trigger.

◆

Kwahom checked the location of Hahya's data terminal, which hadn't moved in at least ten minutes. Was the boy waiting there, or was it some kind of trap? The hunter remained mindful of both possibilities as he cautiously advanced.

He found the device lying abandoned in the middle of a hallway. Kwahom picked it up and examined it with a look of suspicion.

"Did he dump it here because he figured out I was tracking him?"

If the boy hadn't realized that Kwahom could use the terminal to locate him, the hunter would be able to launch a surprise attack. But if Akira had noticed that he was coming straight for Hahya's terminal, then Kwahom expected that the boy would use the device as a decoy for an ambush of his own. The veteran hunter, in turn, had been planning to spot the ambush and turn the tables on his overconfident adversary.

Finding the terminal by itself threw a wrench into his plans.

Kwahom frowned. It would be difficult to snipe at him from around a bend in the corridor or some other hiding spot, but he still couldn't shake the feeling that something was wrong. If anything, his apparent safety made his anxiety worse. His instincts were screaming at him to expect an ambush.

An instant later, his fears proved justified.

Something sliced Kwahom's torso in two despite his body armor. His upper and lower halves toppled to the floor as his vital organs spilled from the cut. Amid the shock and pain of his brief final moments, the hunter noticed a long horizontal rent in a nearby wall, and his fading consciousness grasped that something had cleaved him through it. Then, still wondering what had caused it all, he died.

◆

On the other side of the cloven wall, Akira stood frozen, his outstretched hand still clutching the handle of the knife—its blade had crumbled to dust with a single use. After shooting off the nub on its handle, he had swung it just as Alpha instructed him to. A bluish-white flash from the blade had sliced through Kwahom and left a five-meter gash in the intervening wall, even though the blade could reach neither from where Akira was standing. He could see into the corridor through the smoking gap, which was roughly a centimeter high and gave off a charred smell.

Well done, Alpha said from beside him with a smile and a nod. *You managed to kill him. It's safe now.* She sounded as casual as if he had just completed some minor chore.

"Huh? Oh, yeah. Right." Akira felt dazed, unable to wrap his mind around what had happened and how calmly she had reacted to it. Perplexed, he took another look at the bladeless handle.

"Alpha," he asked, "what's the deal with this knife?"

I'm not sure what you mean. It's an Old World knife manufactured and sold for use by the general public. Her tone suggested that there was nothing remarkable about that, but Akira looked even more curious.

"So, regular people in the Old World needed knives that could slice through walls?"

That wasn't their main purpose. The denizens of the Old World wanted sharper, longer-lasting edges and ended up creating knives that could even cut through walls as a result. What you just did isn't possible unless you destroy the safety mechanism.

"The safety?" He reflected. "I know I broke it, but did that really make such a big difference?"

The energy in the knife normally preserves the blade and its sharpness. Removing the safety allowed it to release all that energy in one go, without regard for the physical limitations of the blade. Otherwise, not even an Old World knife could cut through a wall and the person on the other side, along with all his gear. Alpha spoke nonchalantly, almost convincing Akira that this was perfectly normal. Almost.

"Wouldn't that still make it awfully dangerous?" he asked, looking conflicted.

Well, yes. Extremely. But so what? It's safe if used correctly. You used it in an unsafe way deliberately.

"Well, I suppose." Akira had no real reason to argue or to doubt Alpha's explanation. Still, he could not shake the idea that the knife was dangerous. And what did that say about the Old World as a whole, where such tools had been commonplace?

Alpha flashed a grin that was at once proud and impish. Now, are you satisfied with my support? You thought you didn't stand a chance against hunters, and now you've beaten two, even if you did ruin a relic in the process. I wouldn't mind a show of gratitude, you know.

Akira bowed, his serious expression at odds with Alpha's playfulness. "Thank you. I would have died without you. And I think that part of me didn't completely trust you until just now. Sorry."

Alpha dropped her teasing attitude and smiled kindly. Don't worry. If I've finally earned your trust, I'm happy. Now, what shall we do next? Stick to our original plan and track down relics, or head back and call it a day? You must be tired, and exhausting yourself isn't efficient, so there's no need to force yourself.

"To be honest," Akira said, his worry plain on his face, "I am tired, and I'd like to go back, but we haven't found anything yet today. I need to bring back something if I want to get the rest of my money from the exchange."

Let's just check this building, then. With my help, you'll have an easier time spotting relics that most hunters would miss.

Akira agreed. Their search turned up a few extremely dirty handkerchiefs which no ordinary hunter would give a second glance to—nor would Akira have, if Alpha hadn't informed him that they were of Old World manufacture. But those were still better than nothing, and with that he called off his search, returning to the city with as much of Kwahom's and Hahya's gear as he could carry.

Only the two corpses remained in the building—hunters killed in a failed attack on a fellow hunter, an all-too-common scene in the East.

Chapter 5: Akira and Shizuka

Once safely back in the city, Akira made straight for the exchange. He lined up at the counter, just as before, and found himself face-to-face with the same official, Nojima.

“Show your hunter ID if you’ve—oh, you again.”

The change in Akira startled Nojima. There was no sign of the ordinary slum child he had seen at their last meeting. True, Akira had salvaged the bare essentials of a hunter’s gear from Kwahom’s and Hahya’s belongings, but more importantly he exuded, albeit faintly, the distinctive air of one who had received the baptism of the wastelands. There stood a hunter—still a rookie, yes, but no longer a hopeful who had merely completed his registration.

Nojima smiled. Perhaps Akira would patronize the exchange for a while yet. He then set about examining the boy’s goods.

“These are, er, kind of iffy,” he said. “Did you just get lucky with the last batch?”

Akira scowled. The expedition had nearly cost him his life, after all. “Sorry they’re ‘iffy,’ but these are still Old World relics I brought back from the ruins, so they should be good enough to get me the rest of my last payment.” Then he looked curiously at Nojima. “What do you mean, ‘lucky’?”

The official grinned cheerfully. “See for yourself.”

As before, Nojima moved Akira’s tray and its contents to a shelf behind him, then entered something into a terminal on the counter. A machine beside it then spit out a stack of bills, which he stuffed into an envelope and set down before Akira, smiling all the while.

“That’s your post-appraisal payment for your last sale, plus your advance on this one—200,000 aurum altogether.”

Akira nearly fainted when he heard the total. Speechless, he slowly picked up the envelope and pulled out its contents. His consternation only grew as the sight and touch of the bills assured him they were real. Just a few days before, he had fought to the death over three hundred aurum; now he couldn’t wrap his mind around the fortune in his hands.

Nojima chuckled, satisfied with Akira’s reaction. “Not many kids get payouts like that around here, you know. Spend it wisely. Now get moving; you’ll stick out if you keep standing there.”

Akira snapped back to reality, hurriedly pocketed the envelope, and walked somewhat stiffly out of the exchange. One moment he had been the rookie hunter; now he was once more the child of the slums. Nojima watched him go with a bittersweet smile.

Akira remained shaken even after leaving the exchange, and he showed no sign of recovering.

Akira, Alpha called to him in her usual tone. Calm down. You're going to have a hard time if pocket change like that is enough to make you lose your cool.

"P-Pocket change?!" Akira blurted out. Such a description was unimaginable after his life in the slums. "What are you talking about?! This is 200,000 aurum! A fortune!"

Alpha fixed him with a stare. No, it's pocket change, she said with a slight edge to her voice. Remember that, since you had to risk your life for it even with my support.

"Th-That's kind of a tall order."

Also, you look like a weirdo talking to thin air. Be careful.

Akira clamped his mouth shut; acting strangely would make him a perfect mark. He struggled to calm himself, with little success.

Anyway, Alpha continued, let's call it a day and get some rest. You're exhausted from the ruins, and you'll stick out like a sore thumb if you stand around here waiting to calm down.

"O-Oh, yeah. Right." Akira had regained enough composure to keep his answer to a whisper, but he was still obviously dazed as he set off toward his usual sleeping spot in the back alleys.

No. Alpha stopped him, her expression serious. *Not that way.*

"Huh? But this is the way to where I sleep."

Not anymore; you're going to stay in a hotel. You can afford it, remember?

"W-Well, yeah, but..." The habits of poverty made Akira hesitate to spend his hard-won earnings on a room for the night.

Alpha smiled gently, as though correcting a little child. This won't be a waste. Getting attached to pocket change will only get in the way of staying alive. You earned it, so spend it effectively. I'll help you out with money management too. Don't you trust my support?

When she put it like that, Akira couldn't refuse. They had, after all, promised to build up trust through cooperation. He nodded, resolve beginning to appear on his face even as he tried to stop his heart from racing over his newfound wealth.

"Okay."

Thanks. Now, let's go to our hotel. I hope you won't mind if I pick it out.

"I won't. It's up to you."

Then follow me. Alpha led the way with a smile. Akira followed, anxiously trying to estimate how much a hotel room would cost him.

Hotels catering to hunters were generally open to all comers, as long as visitors obeyed one rule: while weapons were permitted, the proprietors expected guests to be on their best behavior with anti-monster armaments, which were so powerful that misusing them could easily lay waste to both people and property. Still, even fatal clashes were allowed as long as the parties involved paid proper compensation. The cheap hotels for hunters

near the slums were especially lax in that regard. They wouldn't turn away even an armed street urchin so long as he could pay, so Akira had no trouble.

The room he ended up booking was in the hotel's average price range and reasonably spacious—an attractive feature for hunters looking to store relics or perform maintenance on their gear. It also included a bed, a bath, and a refrigerator stocked with food. Above all, it was far safer than the streets.

To Akira, the difference between the hotel room and sleeping in an alley was night and day. Rather than getting excited at the comparative luxury, though, he looked conflicted and even a little gloomy.

"Twenty thousand aurum a night? I can't believe it…"

While he appreciated the room, that didn't mean he could pay for it without hesitation. His hand had trembled slightly when he'd settled his bill. Alpha had chosen the room—left to his own devices, he would have opted for a cheaper one. He sighed, his head drooping listlessly over such waste.

Alpha smiled a little apologetically. I'm sure you have a lot on your mind, she said, but why not start with a relaxing bath?

"A bath?" Akira repeated, the word instantly changing his dejection to joy. "Yes! Definitely!"

There were residences with baths, even in the slums, but only a select few—the occupants and those who could afford to pay them for the privilege—were permitted to use them. Other residents generally had no opportunities for bathing. The best that a child like Akira could manage was to wipe himself down with a rag dipped in water unsuitable for drinking. He could only dimly recall his last bath, although he still thought back to it as he happily made his way to the bathroom.

While the tub filled, he took great care washing himself with lots of hot water and complimentary soap, savoring the luxury that would be impossible on the streets. It took a long time before the water rolling off his body remained clear and the soap began to lather well.

By the time he was thoroughly clean, the tub was full. He immediately immersed himself up to his shoulders, surrendering to the pleasure of the hot bathwater. His face relaxed, and he moaned softly as his exhaustion and consciousness started dissolving into the tub.

How's the water?

Akira turned his dissipating attention toward the voice and saw Alpha sitting in the tub beside him, entirely nude. Droplets of water rolled over her skin, which was slightly flushed from the heat, and funneled into her cleavage. Only the distortion of her image in the bathwater and the rising steam obscured her ravishing beauty.

Of course, the incorporeal Alpha could not actually soak in a tub—she was merely displaying herself in Akira's vision. But computer processors with astronomical power calculated her image down to the minutest details of the limpid water, its waves, and the light reflecting off its surface, so that

she blended flawlessly into the scene. Apart from the ripples that passed through her bewitching body, there was no visible sign that she wasn’t physically present.

“It’s amazing,” Akira absentmindedly replied. “Why are you naked?”

Alpha blushed demurely. Who takes a bath with their clothes on?

“You’ve got me there.” Akira nodded, apparently convinced, and resumed staring vacantly ahead and lounging in the tub.

Alpha remained smiling, but she was less than satisfied with his response. *Akira,* she said, *is that all you have to say about my look?*

Looking a tad bewildered—much of his mind had already dissolved into the bathwater—Akira considered. Then he hesitantly replied, “Your body’s made out of, what was it, ‘computer graphics,’ right?”

Yes, it is, but that’s not what I mean. Doesn’t seeing me like this make you think or feel anything? Be honest—you must feel something.

Akira gave Alpha another puzzled look, pondered, and then said, “You have, um, a big chest?”

Alpha grinned ruefully. I was hoping for some interest in my body, but that didn’t sound like you care much.

For a boy his age, Akira hardly reacted to sharing a bath with a nude beauty—even one he couldn’t touch. When Alpha shifted in a way that showed off her buttocks, which jiggled a bit as the water sloshed against them, he paid no more attention to them than he had to her voluptuous breasts and wet, flushed skin. To Akira, her naked body was nothing beside the pleasurable warmth of the bath.

You’ll drown if you fall asleep like that, she warned, before he was lulled into slumber.

“No way am I gonna die in a place like this,” he muttered languidly.

Then I suggest you get out, dry off, get dressed, and go to bed.

“Fine.”

Akira stood unsteadily and slowly climbed out of the tub. After toweling himself dry, he collapsed into bed wearing a set of complimentary pajamas, unable to resist the lure of sleep.

Sweet dreams, Alpha said with her usual gentle smile. He just barely managed a muffled “Good night” of his own before a deep slumber claimed him.

Akira didn’t wake until well after dawn the next day. His accumulated fatigue and comfortable bed led him to sleep far longer than he would have on the ground of an alleyway. The strange pleasantness left him a little dazed even after waking.

Good morning, Akira, Alpha called to him with a smile. I see you slept well.

“Morning, Alpha,” he mumbled hazily. All at once he noticed his unfamiliar surroundings and bolted awake. “Hang on! Where are we?!” He stared around, frantic. In the alleys, waking up slowly could mean death.

We’re in the hotel room you booked last night, Alpha responded, her gentle tone calculated to soothe his nerves. *Remember?*

The memories of the day before finally came back to him. “Oh, yeah,” he sighed, relieved. “We stayed in a hotel.”

Now, how about breakfast? Alpha pointed to the refrigerator. The food inside was included in the hotel bill, and there were no refunds for leftovers. *You won’t need to go for rations today, so you can take your time.*

Akira’s spirits rose as he warmed up his frozen breakfast. He didn’t have to wait in line for a meal, the food was hot, and the water was chilled—a far cry from rations. And he ate in a private room, free from the fear that anyone would snatch his meal from him.

This was worth the twenty thousand aurum, he thought, a smile spreading across his face as he savored a meal totally unlike any he’d had before.

Smug, as if reading his mind, Alpha grinned. *Aren’t you glad you stayed in a hotel?*

Akira’s stubborn streak made him hesitate to give an honest answer. Yet he couldn’t think of a rebuttal, and he *was* genuinely grateful. So instead, he adopted a defiant attitude and answered firmly, “Yeah, I am.”

Alpha gave a satisfied smile that made him feel oddly embarrassed as he continued his meal.

◆

Many hunters preferred to operate out of Kugamayama City: there were the numerous nearby ruins, of course, and the city’s lower district was packed with shops catering to relic hunters. Cartridge Freak, a general store that sold mainly guns and ammo to both new and experienced hunters, was a typical example. Even its finances were typical—it did enough business to stay out of the red, but not enough to open a second branch. Its manager, Shizuka, ran the shop alone, and her efforts, such as advising customers on appropriate gear, made Cartridge Freak a lasting favorite of many of the new hunters who bought their first equipment there.

From time to time, some of those hunters would stop coming back. Some matured as hunters, grew dissatisfied with Cartridge Freak’s selection, and moved on to more expensive stores in search of higher-performance equipment. Others—the vast majority—died, swallowed by the desert wastes.

Shizuka was an attractive woman. She knew that some of her customers were more interested in her than her wares, and she often received news that a man who had been hitting on her just the day before had died in the ruins. In this business, it was unavoidable, and she wasn’t sentimental about it, but she had made up her mind to never get into a relationship with a hunter.

That day, she was in her usual position at the counter, surveying the shop while she waited for customers, when an unfamiliar face entered. He was a child, and while he was barely well-armed enough to pass for a hunter, his clothes were only neat by slum standards, and he didn’t look particularly strong. Based solely on his appearance, Shizuka was unsure

whether to treat him as a real customer. She watched the boy closely as he stared curiously around the store—but when he didn't seem intent on stealing from the displays, she relaxed.

After entering the shop, Akira spent a little while looking at the displays and then, relieved that he hadn't been kicked out for being a kid from the slums, examined the merchandise in greater detail. Neat rows of firearms of all shapes and sizes filled the store, and beside each price tag was a digestible summary of the weapon's catalog specs. But Akira lacked the basic knowledge to parse them even if he had been able to read, so he could only make out the numbers.

"What's the difference between these two? Just the price," he groaned, curious but uneasy as he compared two guns. They looked identical to his untrained eyes, but one was nearly double the price of the other. He was about to spend money he had nearly died for on a gun that would help keep him alive. A careless mistake would not only threaten his future as a hunter, but hurt his pride as well.

There are a number of differences, Alpha told him soothingly with her gentle smile. I can explain them all, but let's save that for later. I'll pick things out for you, so don't worry if you don't understand.

"Thanks." Akira was speaking so softly that he could barely hear himself, although Alpha, who didn't rely on sound in the first place, still caught every word clearly. He was trying not to appear suspicious while shopping, but unconsciously he still turned to look at Alpha.

He keeps staring off into space, Shizuka wondered, confused. Is someone there? Using active camo, maybe? But that shouldn't work inside my shop. It must be my imagination. Maybe he's just having trouble deciding.

She had contracted with a private security firm to rent security equipment—including a device that disrupted thermo-optical camouflage—and install it inside Cartridge Freak. She checked the device's status, just in case, but saw nothing that aroused her suspicion.

Once Akira approached the counter, Shizuka greeted him with a friendly smile. "Welcome to Cartridge Freak. Is this your first time here? I'm Shizuka, the manager. What can I do for you?"

"An AAH assault rifle with ammo and maintenance tools," Akira answered, just as Alpha had told him to. "And I'd like to sell some things." On the counter, he placed several guns that had once belonged to the pair who had attacked him in the ruins.

Shizuka inspected each weapon's condition. "One of the guns you're selling is an AAH assault rifle. Are you sure you want to replace it with a new one?" she asked by way of advice. "I can see that it hasn't been well taken care of, but it could still be perfectly serviceable with proper maintenance. And this one outperforms an AAH. Do you really want to sell it?" She would turn a bigger profit if she held her tongue, she knew, but that wasn't in her nature.

Go ahead. Buy a new one, Alpha said. She explained, Your ability to use the gun easily matters more than its simple specs. You'll be getting used to the AAH as part of your training, and a new gun will be better for that than one with quirks from a previous user.

"It's fine," Akira told Shizuka. "I'd like to sell these and buy a new AAH."

"All right." Shizuka did some calculating. "In that case, minus the value of what you're selling, that will be 100,000 aurum."

Akira settled his bill and then looked at the remaining bills in his envelope, feeling somewhat conflicted. Yesterday, his hands had trembled at receiving a fortune of 200,000 aurum; today, he had only eighty thousand left. He understood now why Alpha had called it pocket change, and he couldn't suppress a bitter smile.

Shizuka set Akira's purchases on the counter and gave him a smile that combined customer service and confidence in her wares. "Here you are. Would you like me to explain these to you? You'd be surprised how many people use them without a proper understanding, so it couldn't hurt to listen. I happen to have some time on my hands, so I'll give you the full rundown."

Akira hesitated for reasons he didn't understand. He wasn't used to receiving kindness, even in a business context, and he decided to take advantage of it. Anyway, he really was interested, he told himself, not realizing that he was making an excuse.

"Sure, um, if you wouldn't mind."

"Not at all." Shizuka eagerly launched into her explanation. She really did have time to kill, and she also was passionate about the subject, so she spoke at length and with a hint of pride. "The AAH assault rifle is a masterpiece of a weapon and a favorite of many hunters. It has one of the longest histories of any gun currently in use in the East…"

The AAH assault rifle, Shizuka told him, was a famous weapon with over a century of history. Its design had been hailed as a masterpiece when it first hit the market, and one hundred years of continual refinement had ironed out almost all of its kinks. The resulting gun was relatively inexpensive for an anti-monster weapon and still widely manufactured and sold throughout the East. The AAH could switch between semiautomatic and fully automatic fire and also boasted high accuracy for sharpshooting. It was dependable, durable, easy to maintain, and rarely malfunctioned—features that made it the favored weapon of many.

Many manufacturers added features, and some devoted users modified their guns beyond recognition, but all these subtypes were currently lumped together under the label "AAH assault rifle."

The weapon was so well regarded and widely used that even hunters who relied on tanks, humanoid mechs, or similar heavy combat gear to deal with monsters sometimes carried an AAH too—as insurance in case they lost their normal gear, as a good-luck charm, or just because. That was the

AAH assault rifle.

Shizuka concluded her explanation with evident satisfaction. A listener as attentive as Akira made even details that were common knowledge to most hunters worth telling.

“Do you need anything else?” she added with a smile. “You can never have too much medicine, for instance. I recommend putting up with a little extra weight and carrying more than you think you’ll need, even if that means cutting down on your ammo reserves a little.”

“Really?” Akira looked startled. “Extra ammo seems more important to me.”

“If you need so much ammunition that you’d be giving up medical supplies to make room for it all, then I’d say you should plan to turn back earlier instead. Even injuries that don’t feel serious can end up getting you killed, so knowing when to call it quits is more important than pushing yourself to keep going.”

Akira considered for a moment. He still had more of the medicine from the ruins, and guessing its price based on its effects, he concluded that he couldn’t afford more. So he tried to think of something he needed that might be within his budget.

“In that case, do you have clothes for hunters?” he asked.

“You mean like body armor or powered suits?” Shizuka replied apologetically. “I’m sorry, most gear like that requires individual size adjustments, so I usually don’t carry it. I suppose I could order something if you insist.”

At a store catering to hunters, “clothes” typically meant combat gear, such as body armor designed to resist blades, pressure, or bullets, or powered suits with synthetic muscles and other technologies to boost physical performance.

“Oh, no.” Akira hastily shook his head. “I meant, like, tough clothes that are easy to carry things in. Maybe a backpack too.”

“Oh, I see.” Shizuka paused to consider. “I don’t have anything in children’s sizes, but I think I could find something that you could adjust to fit. Wait a second.”

Shizuka disappeared into the back room and then returned with the set of clothes and backpack Akira had requested. The clothes were designed to have simple armor sewn to them, but in their current state they were merely a bit sturdier than average. Like the backpack, they were outdated models that had been gathering dust in Cartridge Freak’s storeroom, so Shizuka told Akira that she would include them in his earlier payment—in other words, they were free.

“Are you really sure?” Akira asked, shocked.

“Don’t worry about it; they’re basically an extra. If that doesn’t sit right with you, feel free to help out my bottom line by becoming a regular customer.”

“Got it. Thanks for everything.” Akira did his best to return her gentle, friendly smile, then bowed politely.

Shizuka saw him off with a cheerful wave. But once he was out of sight, her expression clouded with worry.

“A child hunter,” she said to herself. “I wonder how long he’ll manage to survive.” Hunting was a deadly job—even more so for children—and her experience told her that Akira had never even used an anti-monster weapon before. “I really do hope that he becomes a regular.”

The clothes and backpack had been the least that she could offer for a boy who might soon be dead.

Chapter 6: Trust

Back at the hotel, Akira smiled as he studied the AAH assault rifle he'd purchased at Shizuka's store, thrilled to finally be armed like a real hunter. The weapon, designed and manufactured specifically to combat monsters, felt heavier than he had expected—as heavy as the reliance he would have to place on it. As he imagined the kinds of battles that he might have to face in the future, his grip tightened on the gun and his smile vanished.

Watching him, Alpha seemed equally somber, but her thoughts were on a different subject altogether.

Was that woman your type? she asked.

"Who do you mean?"

The manager of the shop where you bought that gun—Shizuka, was it? You were totally into her.

"I was?" Akira looked puzzled. "I just bought some gear from her. I was happy that she threw in the clothes and backpack for free, that's all."

Alpha persisted. No, that wasn't all. I can tell.

"I don't know what to tell you." Akira wasn't trying to be evasive—his feelings were simply unclear to him. So he let the subject drop, looking vaguely perplexed.

Although Alpha considered it vitally important to learn about Akira's taste in women, her calculations told her that this was not the time to pursue it. Whatever, she said dismissively. Let's discuss our plans, including your training with that new gun. Generally speaking, we'll visit the ruins once a week and devote the rest of our time to drills and education. Don't complain about that, even if you want to hunt relics and earn money more frequently.

"Got it."

Alpha looked surprised. Really? I expected you to make more of a fuss.

"I made up my mind to trust you about stuff like that," he answered earnestly.

Trust. Akira hadn't given any particular thought to his choice of words, but the term evidently meant something special to Alpha, who grew thoughtful.

I see, she said. In that case, I'll skip right to the most important part of our future work. Akira, I'm about to tell you something very important, so listen carefully.

Akira nodded, equally serious. In the past, he'd only seen her look like this when his life had been in imminent danger. Seeing the same expression on her face now made him automatically sit up and pay attention.

Alpha returned his nod, suddenly all business. She remained silent for a bit.

"Alpha?" Akira asked, puzzled.

When she spoke, both her voice and expression seemed detached and impersonal. May I perform diverse operations on you without prior consent or explanation in order to facilitate more sophisticated support? This includes the acquisition and use of Tier 5 Personal Information without consent. Acquisition of additional information concerning this explanation is optional.

"Meaning what, exactly?" Akira asked. Alpha's change in demeanor left him as confused as her words did.

You would require approximately 120 years to gain a general comprehension of these regulations and their individual components via verbal explanation. I am currently unable to calculate the time required for in-depth knowledge. The Bias Avoidance Act stipulates that I present articles in an order of priority established using Regulation Awareness Computation Method A887. To gain a general comprehension of these regulations and their individual components via verbal explanation of relevant articles, you would require—

"Um, I don't really get what you mean, but is a 'yes' good enough?"

I will consider that consent to all specific clauses not in violation of the general description. This includes mental guidance in the narrow sense and interference with free will more broadly. Preservation of the subject's life and thoughts is equivalent to the restrictions on life and thought under article 213,873 of the Self-Sufficiency Self-Restriction Act. This includes all provisions concerning special collaborators in non-qualified regions. Simultaneously…

None of this made any sense to Akira. When he tried to interrupt her for explanations, her clarifications grew ever more complicated, and Akira finally gave up.

Yet he did grasp that she was asking for permission of some kind. And he also remembered that disobeying her orders placed his life in even greater jeopardy than it already was. So although he was hesitant, he came to a decision.

"My answer to your first question is 'yes,'" he said, his face resolute.

Please confirm. May I perform diverse operations on you without prior consent or explanation in order to facilitate more sophisticated support?

"Yes."

And suddenly the old Alpha was back. *Thank you,* she said. *And don't worry—you won't regret it.*

Akira was relieved that Alpha had returned to normal. Then suddenly he felt a flash of annoyance. "Then why'd you make it sound so complicated?!"

That's the rules, she replied. It's always that way—you have to go through red tape to avoid trouble later. She looked coyly at him. Now, Akira, when we were in the bath yesterday, what did you think of my breasts?

"Wh-Where did that come from?" Akira stammered.

Because when I asked you what you thought of me naked, you called them "big."

Akira hesitated. "Did I say that?"

Well, it sounded perfunctory. But if that's what you thought when you were so out of it, then you must be quite enamored of them. Would you like to touch them? she asked, playfully seductive.

She was teasing him again, and Akira bristled at her attitude, not wanting to give her a direct answer. But neither did he want to lie—he had promised to build trust with her—so he responded evasively.

"I can't anyway, can I?"

Not now, Alpha admitted. But you could once you've finished exploring the ruins I have in mind. What do you think? Would you like that? Sound appealing?

"How would exploring ruins allow me to touch you?"

It's complicated. Just tell me: wouldn't you like a feel?

Akira glared, suspicious. "Why are you being so pushy?"

She smiled back sweetly. I'm trying to motivate you with a reward that even you can grasp.

"You mean, seduce me into doing what you want?"

Well, yes. Just looking at me doesn't do much for you; even seeing my naked body up-close only stirred you up a bit, you thick-skinned lout! But what if you were to touch me, hmm?

Akira sighed at her ridiculous comments. "Try again when I'm a little older. I'll do all the staring and touching you want once I'm an adult, all right?"

Very good, Alpha answered confidently. I plan to make this a long-lasting partnership, so enjoy yourself when the time comes. And with that, she dropped the subject, much to Akira's relief.

Having distracted Akira from asking about her strange, technical speech a few minutes earlier, Alpha turned back to more serious matters. *Now, it's high time we started on your training. Are you ready?*

Akira nodded, all earnestness. "I'm good to go."

She nodded back, satisfied. You'll start by learning telepathy.

"What's that?"

For now, think of it as conversing without using your voice, and we'll work from there. Fast, accurate communication is vital, both in and out of combat. And once you learn this, you can talk with me without looking like you're muttering to empty air, so let's make this quick.

"Easy for you to say." Akira didn't mean to complain about his training, but telepathy wasn't what he'd had in mind. "What exactly am I supposed to do?"

Listen and speak with your brain instead of your ears and mouth. Everybody's different, so it's hard to explain it in words. You'll have to get the hang of it yourself.

Akira only looked more confused, so Alpha took a more concrete approach.

Try imagining yourself talking to me. It doesn't matter what you say—maybe a simple order, like "Turn right." If I respond, you'll know that you got through. Begin.

Akira still didn't quite understand, but he did as he was told. After practicing for a while without results, he began muttering his messages under his breath without realizing it, until Alpha warned him that doing so made the exercise pointless.

The process of trial and error was arduous. Akira focused and wished intently. He appealed to Alpha in his mind while staring fixedly at her. He closed his eyes and called to her silently. But despite his intense efforts, she made no response. Even so, he persevered in following her vague instructions.

The turning point came after about an hour. Alpha turned to the right in response to Akira's repeated, desperate mental cries. He was stunned, and she laughed.

That's the way, she said. You're getting the hang of it. Keep going.

O-Okay. Akira replied telepathically without even realizing it.

After that, he made rapid progress, and his telepathy grew more precise with repetition.

You're getting pretty good at this, Alpha remarked. You're learning to hear my voice telepathically, as well. When I work through your sense of hearing, you might not hear me over gunfire and the like, but now you'll understand me clearly no matter how much noise there is around you.

Oh, I see, Akira replied. That sure is convenient.

Right? This is all part of your combat training.

But couldn't we have done this outside?

Alpha grinned, amused at his naivete. Would you really want people to see you talking to yourself like some weirdo?

I guess not. Imagining how he must have looked in the past, Akira smiled back ruefully.

Before long, he was able to carry on a telepathic conversation with ease, and Alpha moved on to the next phase of his training.

I'd say you've mastered linguistic communication at the verbal level. Next, you'll learn to accurately send and receive less concrete information—like intentions, desires, and mental images.

Akira knit his brow, perplexed again at Alpha's abstract explanation, but she pressed on regardless.

A picture is worth a thousand words, and during combat, conveying images quickly and accurately is easier than describing them. Consider this another part of your combat training and give it your best shot.

"Okay," Akira replied, "but how will I know if I'm getting through to you?"

Start by imagining outfits for me and try to send those images. I'll change into whatever I get from you, and if it looks like you imagined, you were successful. Give it a shot.

Akira did as he was told, and Alpha's clothes changed—into an ugly mess of different fabrics seemingly sewn together at random. He barely had time to grimace at the sight before the clothes began to distort further and then vanished.

That was a failure, she said, standing fully exposed before a flustered Akira. You didn't properly communicate your mental image of the outfit—unless you wanted to see me naked.

"I… I didn't! Put some clothes on!"

No. This is a training exercise. If you want me to wear clothes, then get better at transmitting images.

Akira rushed to make another attempt, and once again the vague suggestion of an outfit covered Alpha's nude body. But his hurry had made him even less precise, and she was soon naked again. Over and over he tried, and over and over she donned a bizarre attempt at clothing which at once collapsed into nothing at all. He could have stopped her from going completely nude just by picturing some simple underwear, but he was too flustered to realize that—and Alpha wasn't going to tell him.

It wasn't until after a string of failures and a late dinner that Akira at last succeeded in clothing Alpha in an utterly plain white outfit.

That's enough for now, Alpha said. I think you did well for your first day.

"I don't know why, but I'm beat," he replied.

In that case, take a bath and get a good night's sleep.

"Mm, sounds good," he sighed.

Yet, despite his mental fatigue, Akira wasn't as exhausted as he had been the day before. He relaxed leisurely in the bath for a while, went straight to bed, and surrendered himself to sleep.

It had been a long day. Akira had trusted Alpha enough to give her his permission without understanding what it was for. She wasn't lying—her training would enhance Akira's skills, and his permission would help him survive, since it allowed her to provide better support as they conquered the ruins. But there was more to it than that. In his deep slumber, Akira never even wondered what he had consented to.

◆

The following day found Akira no longer cooped up in the hotel room, practicing telepathy; his training in the wasteland had finally begun. He was wearing the protective clothing Shizuka had sold him, and he carried the AAH assault rifle. All in all, he cut a striking figure compared to when he had trudged into the desert with just a pistol in his hand.

It also made him feel nervous with anticipation.

Now, let's begin your marksmanship training, Alpha announced, standing before him with a smile on her face. Akira, hold your gun ready to fire.

Akira did his best, but without firearms training, he had to rely on vague memories of firing stances. The resulting position showed his inexperience.

Nope. You've got it all wrong, Alpha remarked cheerfully. *Use your body to stabilize the gun, like this.* An AAH appeared in her hands, and she demonstrated the proper form. Akira was a bit taken aback that she could display more than just clothing. But he realized that it made sense if he thought of the gun as part of her appearance, which she could alter at will.

Once he had copied her example, she began pointing out numerous minor faults in his posture, from the position of his arms and legs to the overall tension of his muscles and his precise center of gravity. Her corrections grew increasingly detailed until at last she instructed him on exactly how much force to put into his big toes. Akira was too absorbed in his training to notice how accurately she grasped fine details that were not apparent to the eye.

They spent an hour just practicing proper form. Akira was already getting tired despite not having fired a shot, but his fatigue and Alpha's instruction had paid dividends—his firing stance had already improved dramatically.

There, that should do it. Alpha nodded, satisfied that he no longer held his weapon like an amateur. *Pay attention to how you're standing right now. Now, shoot that pebble.* She pointed ahead of him. He strained his eyes in that direction and frowned—he had no way of knowing that she was pointing straight at a tiny stone one hundred meters away.

"What pebble?" he protested.

Alpha's smile was undaunted. You'll see. Get ready to be surprised! I'm about to remind you just how amazing my help is! Look again.

Akira did so, a bit skeptically, and he saw a green rectangle appear, with a green circle inside it. When he instinctively focused on the circle, it magnified what he was looking at, like the automatic zoom function of high-end binoculars. He stopped focusing, surprised, and the enlarged display returned to normal.

"Alpha!" he exclaimed. "My eyesight's gone all wonky! Did you do something?!"

Alpha grinned, satisfied with his reaction. Thanks to me, your vision now has a zoom function! Try zooming in on the pebble.

A red dot appeared in Akira's view. He focused on it, and once again a portion of what he saw enlarged, revealing a blurry image of a small stone outlined in red.

Magnification can only do so much with your naked eyes, Alpha added. Now try using your rifle sight.

Peering through the sight, Akira struggled to find the pebble. The field of view the sight afforded him was quite narrow. Then a marker appeared on

the right edge of his vision. He slowly shifted his aim toward it until the pebble came into view. A blue line extended from the muzzle of his gun toward the tiny rock.

That blue line is the trajectory I've calculated, Alpha explained. Line it up with your target when you fire, and you'll most likely hit it.

The blue line kept wavering, but Akira did his best to align it with the pebble and pulled the trigger. Bang! The recoil knocked him off balance. A bullet burst from the rifle, piercing the air as it flew. The shot went wide of its mark and vanished into the distance.

"I missed," Akira said a moment later.

It's only a prediction, not a prophecy, Alpha replied. Factors outside my calculations can significantly alter the bullet's flight path. The main problem this time is that you lost your balance when you fired. Remember the firing stance I showed you before, aim carefully, and try again.

Akira focused and kept his aim on the target, but he came no closer to hitting it. He couldn't even see the impact of his shots through the sight, proving that he was missing by a wide margin. Every time his stance faltered, Alpha was quick to point it out, and each time he corrected it and fired again.

In combat, you'll be shooting at monsters, not pebbles, Alpha said. Unless you land precise shots on their most vulnerable points and quickly kill them—or at least incapacitate them—you'll fall to their counterattacks. If you miss, you die—so shoot like your life depends on it.

After another hour, he began to make out bullet holes through the rifle sight. Exhausted, his mind began to wander, and he absentmindedly voiced his thoughts.

"Hey, Alpha. I've been wondering: couldn't we have done all this zoom and telepathy stuff earlier?"

To Akira, it was only an idle question. Alpha, however, determined that the wrong answer would make him mistrust her. She chose her words carefully behind her unchanging smile.

I will do whatever I can, whenever I can, as long as it will help. When those two hunters attacked us, I couldn't do it because you hadn't given me your permission yet.

"I'm pretty sure I would have if you'd asked," Akira retorted. "You just wanted to know if you could support me without my say-so, right?"

I didn't even have permission to ask for that permission back then. It's the rules—rules so long that I don't have nearly enough time to explain them.

"Yeah? Huh. That sounds like a pain."

And I wouldn't have done it then, even if I'd had permission. Suddenly changing your vision in the middle of combat? That would definitely have disoriented you and thrown off your movements. So I'm sure I would have decided against it.

“Oh. You might be right about that.” Akira nodded, his curiosity satisfied.

Noting his response, Alpha added, If it ever seems like I’ve gone out of my way to avoid doing something you think should be easy for me, assume there’s a similar reason. It’s either physically impossible, technologically impossible, or legally impossible, or it would make the situation worse. Not even I can do everything. She smiled pointedly. If I could explore the ruins myself, I wouldn’t have asked you. But there are a lot of restrictions preventing me.

Alpha almost making excuses? Akira was a bit surprised: he’d considered her awe-inspiring, in a vague sort of way.

“Sounds like you’ve got a lot of problems too,” he blurted out. “Sorry to say this, though, but I guess I should be grateful for that—I’d never have met you otherwise.” Immediately, he felt that perhaps he should have held his tongue.

Alpha seized the opportunity to tease him. She brought her face close to his, grinning mischievously. No need to stand on ceremony! she said invitingly. Feel free to flaunt your gratitude! Like by improving your accuracy. Or by being more receptive to my passes at you.

“I’ll do my best with that first one.”

Akira squeezed the trigger. His bullet went wide again.

When it was nearly sundown, his marksmanship was showing some improvement. With Alpha’s support, he could now aim steadily at a decently sized rock a hundred meters away and hit it one time out of a hundred.

He called it a day and returned under cover of night to the city, where he stayed in the same hotel as before. Paying his bill reminded him again just how meager his rapidly dwindling funds really were, but he pushed that worry aside in favor of a bath. When he emerged from the tub, he left his fatigue behind; in its place was a great drowsiness. He tumbled into bed and immediately fell asleep.

Akira spent the next day in his hotel room, performing maintenance on his AAH assault rifle. This was another aspect of his training: not knowing the proper procedures himself, he worked carefully while listening to Alpha’s detailed instructions.

This rifle will be your lifeline for the foreseeable future, she said. If you don’t take proper care of it, you aren’t taking care of your life either. So be thorough!

“I know, I know.”

Despite Alpha’s incessant advice, Akira struggled with his task. With a determined look, he disassembled the rifle, carefully serviced every component, and then reassembled them—with a part left over. He hurriedly took the rifle apart and put it back together again with the part in its proper place, but this time a different one remained. He stared at it and groaned.

I wouldn't recommend firing it in this condition, Alpha warned him cheerfully.

"I… I know that."

Again Akira disassembled and reassembled the rifle. This time there were no parts left over, but that didn't mean that the weapon would function, and Alpha naturally found fault with his work. He struggled through the process several more times, and by then half the day had gone by.

"The way things are going, I'll need a whole day just for maintenance if I ever get a spare gun," Akira grumbled.

You'll just have to practice until you learn how to get it done quickly and efficiently, Alpha replied. You can't afford to have someone do it for you. In any case, that's enough training for today.

"That's it?" Akira asked, startled. "Aren't we going to do more target practice now?"

You've done nothing but explore ruins and train since we met—you need breaks too. Is there anything you'd like to do?

"Anything I'd like to do?" Akira repeated. He pondered, but nothing came to mind. He had spent his time in the slums gathering scrap iron and anything else he could sell—or, more recently, exploring the ruins for largely the same purpose.

Having spent his every waking moment on survival, Akira had an extremely tenuous grasp on the concept of free time. His thoughts wandered, and he answered Alpha with a groan.

Alpha understood what Akira was thinking and why, without needing to ask. In that case, she suggested, why not spend your spare time learning to read and write? You won't be able to efficiently gather information for entertainment or education if you're illiterate. Getting that out of the way soon will help you enjoy all sorts of things too.

So Akira visited the hotel store and purchased several notebooks and some writing tools and began his lessons with Alpha. She was a highly effective teacher, and he was soon able to read and write his own name.

Suddenly, he remembered the error on his hunter ID. He pulled it out and stared at the name—"Ajira." He was finally able to recognize the mistake for himself.

"I guess that means I've gotten a bit smarter," he said with satisfaction—and just a hint of sarcasm.

◆

Akira was back in the desert for more firing practice. He held his rifle firmly, adjusted his stance, peered intently through the sight, and aligned his aim with his target—another pebble. The blue trajectory line that Alpha overlaid on his vision swayed slightly with his breathing.

He drew in a deep breath, held it, and focused. For a brief moment, the blue line held still. Then he squeezed the trigger.

His bullet soared through the air and struck the pebble, shattering it into flying shards.

“Yeah! How do you like that?” Akira grinned. Three hits in a row indicated obvious improvement. Yes, he still relied completely on Alpha’s support, and yes, he was far from becoming a successful sharpshooter on his own. Still, he had made great strides from that first day of misses.

Alpha smiled cheerfully as well. You’re not an amateur anymore, she said. Nicely done. I’m impressed.

Even the stubborn Akira welcomed praise from someone who had constantly found fault with his efforts. A tinge of self-satisfaction entered the smile he gave Alpha; she grinned back, amused and sly.

Keep it up, she said. Now that you can aim reasonably well, we’re moving on to your next exercise. Your target will be a bit different, but keep aiming as though a miss will get you killed, just like I told you.

Alpha pointed, and Akira turned to look, a bit nervous.

He froze in terror.

There stood the weapon dog that had nearly claimed his life a few days before. Fear had etched its appearance indelibly into his memory—its twisted face, the massive cannon growing from its back, its eight unevenly distributed legs. Akira felt certain that he would have noticed its approach—nothing so massive should even be capable of stealth—but it had taken him completely by surprise.

Recovering, he turned to flee, but Alpha intervened.

Don’t worry. It’s only an image, like I am. She laughed as she spoke.

Akira’s gaze darted instinctively to Alpha, who smiled reassuringly, and he regained a measure of composure. He then stared suspiciously at the weapon dog, feeling the pounding of his heart all the while. The behemoth looked absolutely authentic, but it stood perfectly still. It should have been able to see him easily, yet it failed to react to his presence. Akira finally felt convinced that it wasn’t really there, and he heaved a sigh of relief.

“Don’t scare me like that,” he said, glaring reproachfully at Alpha.

You’ll be fighting hordes of monsters like this one from now on, she responded without a hint of shame. You need to get used to them now, and be ready to respond when you encounter one without warning. If this had been a real fight, that panic would have gotten you killed.

She motioned for Akira to resume his training. He wasn’t satisfied, but he readied his rifle again.

Its weak spot is right between the eyes, Alpha instructed him. Make your first shot count.

Akira viewed the weapon dog through his rifle sight. The monster appeared outlined in red, and an indicator marked the weak spot on its forehead. He tried to calm down and align the blue line with his target, but that proved difficult. His trembling arms shook the rifle, causing the blue line to wobble.

Calm down, he told himself. It's just a picture—a target. This is just like aiming at pebbles.

But knowing that didn't mean he stopped being afraid. Though it stood stock still, the target looked identical to a beast that had nearly killed him, and he had to stare directly at it to aim. He struggled to keep a cool head.

But after several deep breaths, his mind and body began to settle. He tensed his trembling arms to steady the blue line and remained as calm as possible while he held his breath and focused. Then, grim, he pulled the trigger.

Despite all his efforts, his bullet struck the ground near the dog, missing not only the monster's forehead but its entire body.

Instantly, the beast sprang to life, unleashing a great howl as its cannon swiveled toward Akira and fired an enormous shell. Akira froze in shock as the shell struck near him and burst into a massive explosion. His gaze remained fixed on the beast as it howled again and tried to fire once more. This time, no shell came. Howling a third time, the beast broke into a run.

Faced with the onrushing behemoth, Akira finally reacted. He fired wildly at the weapon dog, but in panic he neither stood nor aimed correctly. Not a single shot hit its mark.

The weapon dog closed in on him with a speed belying the ungainly arrangement of its eight legs. Naturally, a few of Akira's shots began to hit the monster as it approached, but scattered gunfire meant nothing in the face of such overwhelming power. It ignored the bullets striking it and charged, its mouth gaping to devour Akira.

Akira felt paralyzed in the certainty of death; the flow of time slowed to a crawl as he watched the beast's maw rush toward him. Countless deformed fangs lined its jaws, tough enough to crush debris and rend metal—and to easily consume his tender flesh.

Helpless, Akira watched the monster in slow motion—so slow he thought he could track the drool scattering from its mouth. He knew, without a shred of doubt, that his life would end when the great jaws closed—and then they snapped shut. The force of the dog's leap carried it straight through him.

It took Akira a few moments to come to his senses with a dull "Huh?" When he looked behind him, the weapon dog was nowhere in sight.

I told you it was only an image, Alpha reminded him, grinning.

It finally dawned on Akira that she had been showing him what would happen if he missed, to teach him the deadly cost of failure. Even the explosion from the cannon shell had been purely visual—the place where it had seemed to land was utterly unscathed, and Akira hadn't felt the blast. He almost collapsed as fear and nervous tension released their hold on him, but with difficulty he kept himself standing.

"Warn me next time," he said, looking at Alpha, but too drained even to make his gaze accusatory.

Alpha laughed and pointed at the ground. He looked down and grimaced at the sight of his own severed head—all that the weapon dog had left of his virtual self.

This is what your targets' counterattacks will do to you, unless you target their weaknesses precisely and inflict an instantly fatal—or at least debilitating—injury. I told you to shoot like your life depends on it, remember? Take your training seriously if you don't want this to happen in a real fight.

Akira looked drawn as he met the severed head's gaze—rather resentful, it seemed—and then he suddenly remembered his nightmares. His expression hardened.

"Fine," he said. "I get it. You just want me to get it done, right? Okay, I will. Alpha! Next!"

Alpha looked surprised, then pleased. *I see you're motivated. Let's keep going.* She pointed, and the image of the weapon dog reappeared.

Akira readied his rifle, his face distorted with intense concentration. Though he had spoken to Alpha, his words had been directed more at the virtual severed head and the Akira in his nightmares—his answer to the reproach in their eyes.

He took aim, pulled the trigger, and missed. His target sprang to life, howled, and attacked. This time, however, he kept his gaze fixed on the target. Choking back his fear, he maintained his stance, lined up his sight with the creature's vicious face, and fired a second shot. Again, he missed—his trembling arms, and a moving target, had dramatically increased the difficulty of his task. He ultimately failed to land a direct hit, and the assault ended in one more virtual severed head, but he had kept his eyes locked on his enemy until the bitter end.

"Next!" he barked.

The same thing happened again, adding to the heap of severed heads on the ground, but he kept going.

"Next!"

Finally, after a number of attempts, he managed to steady his breathing, focus, smother his fear with resolve, and land a shot on his target's head. It didn't strike the weak point perfectly, but it did slow the monster down. He kept his sight trained on the beast's head as it lumbered toward him, until at last the weapon dog expired, its head riddled with bullets, just before it could sink its fangs into him.

You did it, Alpha said with a smile. *You're finally—*

"Next!" The earnest look on Akira's face did not falter.

Alpha looked a little taken aback, then her grin returned. *All right. There's plenty more where that came from.*

Another image of the weapon dog appeared. Akira spent the whole day training.

◆

That night, Akira dreamed that the weapon dog was chasing him again. He had a feeling that someone had told him to turn and fire on their signal, but he didn’t know who, and the signal never came. He continued his desperate flight.

Then a flash of realization came over him, and he spun around, his face set, to point his gun at the monster. The weapon in his hands had become an AAH assault rifle. Just as he had done during his training, he looked steadily at his target while he aligned his rifle sight with its head. Then, perfectly resolute, he pulled the trigger. The anti-monster rifle fired a powerful burst into the weapon dog’s twisted head, which distorted even further under the hail of gunfire. The beast died just before it reached Akira.

At that point, he woke up in his hotel bed. It was still night.

Akira chuckled softly, closed his eyes, and went straight back to sleep. He might have the same dream again, but it would no longer be a nightmare.

Chapter 7: Elena and Sara

In the wastelands, flying bullets and rampaging monsters took human lives faster than the blazing sunlight robbed the ground of moisture. Nevertheless, in a vehicle designed to handle the desert, two hunters—both women—were driving across it toward the Kuzusuhara Town Ruins.

While their equipment wouldn't get them anywhere near the heart of the ruins, it was somewhat more advanced than what exploring the outskirts called for. Barring a few exceptions, such as those who beat monsters to death with their bare hands, a hunter owned equipment that indicated how much they could afford and how well they could use it—in short, their gear proved how capable they were. So, by the standards of the hunters operating in the Kuzusuhara Town Ruins, these two were half-cocked.

The driver, Elena, shot a glance at her partner in the passenger seat. "Get ready, Sara. We're almost there."

Sara looked doubtful as she surveyed the distant ruins. "Elena, I know it's late in the game for questions, but are we really in the right place?"

"We went over this yesterday, remember? This is the only ruin a child could reach on foot from Kugamayama City."

"Couldn't they have stowed away on a scheduled transport to another one?"

"Just about any ruin that the Hunter Office runs regular service to is more dangerous than the Kuzusuhara outskirts. The rumor going around is that some wet-behind-the-ears kid showed up at an exchange with valuable relics. People wouldn't be talking if the child looked like they could hack it anywhere else."

"Well, you've got me there."

"I wouldn't be too surprised if a kid from the slums made their way to the Kuzusuhara outskirts and lucked into a major find. We're here."

The latest rumor among Kugamayama's hunters had it that there was still an unexplored area near the city, loaded with priceless relics and accessible even to inexperienced children. It was easier to survive in less challenging ruins, naturally, and so the majority of hunters preferred scouring these to engaging with powerful monsters in more dangerous sites. As a result, uncharted areas likely to still contain relics didn't remain that way for long. Most hunters believed that the relatively safe areas near the city had already been fully explored.

The rumor they were wrong had spread like wildfire. People had actually seen a poorly armed kid selling relatively expensive relics to an exchange. And not only once—they had returned with relics again and again and again. Slum dwellers had died in a fight over the child's earnings. Hunters who followed the youngster had discovered an unexplored zone and made a fortune. Speculation grew each time the story was told, and the rumors had

already taken on a life of their own. Many felt inspired to return to less dangerous ruins.

Elena and Sara were two such hunters. They were too skilled for the relics on the Kuzusuhara outskirts to normally be worth their while, but they could expect a substantial profit if the rumors were true—and little risk even if they weren't. On those grounds, Elena had come out strongly in favor of the expedition. Sara had agreed, although she remained the less hopeful of the two.

"But haven't we already been over this place with a fine-tooth comb?" Sara asked. "We didn't find much then, so I honestly don't expect any more now."

"What's the big deal?" Elena replied, deliberately optimistic in the face of her partner's caution. "Let's check it out. Something might have changed since we were last out here."

"I guess so." Sara flashed a somewhat artificial grin. "What good is making a trip to the ruins if I'm expecting to fail? We'll be more motivated if we keep our hopes up!"

"Yeah! That's the spirit."

In fact, they didn't normally talk to each other like this. Usually, Sara was the optimist, while Elena was the more cautious one. But circumstances had conspired to disrupt their usual dynamic.

Elena's gaze shifted to Sara's chest, and she frowned. "Anyway," she said, "you really ought to resupply on nanomachines soon. I know you've been skimping on that since our income hasn't been the best lately. Are you okay?"

Sara glanced down at her flat chest, which fell far short of its former volume. They both knew exactly what that meant, so Sara put on a cheery smile to stop her partner from worrying.

"Yup," she said. "I already told you, I've got plenty of time. You're such a worrywort."

Sara's chest doubled as storage for nanomachines, which she could consume to enhance her physical abilities. Combat went hand in hand with hunting, and monsters proved challenging opponents for unaugmented humans. To resist the descendants of the Old World's bioweapons or the mechanical defenses of its facilities, most hunters sought out physical enhancements. Powered suits, prosthetics, cyborg implants—the people of the East had turned the technology of the Old World against the remnants of that lost age, analyzing its relics and inventing what seemed like miracles.

Nanomachine treatment was one such invention. It could produce a variety of effects: augmented strength through force field manipulation; improved cellular function; and even the reorganization of bodily functions, including genetic modification. Some extremely high-end versions actually replaced cells throughout the recipient's body with nanomachine equivalents, making them difficult to distinguish from advanced cyborgs.

The technology was extremely popular—it transformed people into superhumans. These people could lift and throw a car without wearing a powered suit; they could deflect bullets with their skin, remaining unharmed. All the while, they appeared indistinguishable from ordinary humans.

But such power came at a price.

Once, on the brink of death, Sara had undergone nanomachine treatment to survive. The operation had been a success—she had not only recovered but also gained augmented abilities in the process. The downside was that her nanomachines had essentially become her life-support system. Even living her everyday life depleted her supply, and she burned through it even faster as she pushed her body while relic-hunting. To make matters worse, replenishing the nanomachines was far from cheap.

Another procedure could prevent her from dying when her nanomachines ran out, but that would cost even more money—and deprive her of her enhanced strength. Then the resulting frailty would cost another immense sum to cure. Money could solve all of Sara's problems, and she continued to tread water because she didn't have enough.

Elena had seized upon this rumor enthusiastically, partly due to her concern for Sara. An area with only weak monsters would put far less stress on her partner, who was their main source of firepower. As Sara expended the nanomachines throughout her body, they were replenished from the reserve in her chest, which shrank as a result. Knowing how large it was when her reserves were full, Elena viewed its current meager state as a warning.

"You know your body best, so I don't want to be too pushy," Elena said. "But if your condition doesn't change, I'm going to *make* you resupply, even if I have to sell my gear to do it."

"Give it a rest." Sara glared. "That would be an even bigger hit to our bottom line. Don't you remember how long it took to get you kitted out like that?"

"It's still not worth your life. We'll work our way up from the bottom again if it comes to that. And if this hunt pans out, the money is going straight to your nanomachine fees." The determination in Elena's eyes brooked no argument. She had known Sara a long time—longer than they had been hunters—and they both knew which of them would back down in this situation.

"Fine." Sara surrendered with a smile. "Honestly, you really can't have a life without money."

"It's too late to whine about that." Elena grinned back. "That's just how it is for hunters."

"You've got that right."

Despite their troubles, both women laughed as they entered the Kuzusuhara Town Ruins.

Sara opened fire on one of the monsters that roamed the Kuzusuhara outskirts, and the hardy predator went down quickly under a hail of bullets. Elena's scouting had alerted her to an ambush, making for an easy victory.

"You certainly don't look like you've got anything to worry about," Elena said with a chuckle.

"I told you I'd be fine," Sara replied, grinning complacently. "You really do worry too much."

She was playing up her confidence to reassure her partner. Elena wasn't fooled, but felt relieved that Sara still seemed well.

Experienced in far more dangerous ruins, they had little difficulty making their way through the Kuzusuhara outskirts. Each had a distinct role as part of their team—Elena collected information, while Sara provided firepower—and their gear reflected their duties. Elena's equipment combined motion detection, echo-based mapping, high-performance scopes, and a variety of other functions that enabled her to chart the structure of the ruins, locate enemies, and gather a wide range of other data. She did carry a gun, but it couldn't compare to Sara's powerful arsenal. Sara's augmented physique allowed her to easily handle firearms whose weight or recoil normally forced their users to wear powered suits. She also wore heavy body armor in order to shield Elena in emergencies.

Elena located threats, while Sara defeated them—or picked up Elena and retreated, if necessary. That was how they had made their way through the dangerous ruins.

Trying to be her usual cheery self, Sara managed a cheeky grin. "Anyway, Elena," she said, "I'm doing my job shooting things, so how's the data collection going?"

"I'm doing my best," Elena replied with a laugh.

"It doesn't look like you have much to show for it."

"Someone would have found it sooner if it were that easy."

"You've got me there."

They exchanged grins, each relieved that the other was all right.

"So, Elena," Sara continued, "how are you planning to do this?"

"I'm scanning for children's footprints to start with. If a kid found an unexplored area like the rumors say, their footprints might lead us there."

"Nice thinking. I'd never have come up with that."

"Of course, I haven't found any yet, although there are more adult footprints than I know what to do with." Elena met Sara's praise with a strained grin. She was striving to live up to her partner's expectations, and her skill was considerable: she could not only identify footprints in the scattered sand and dust on the hard rubble, but also determine that they did not belong to the child from the rumors. Nevertheless, she wasn't satisfied with these results.

"Oh, I almost forgot," she added, changing the subject. "Sara, I should let you know that the colorless fog is getting thicker, so watch out."

“Got it. We’ll retreat if the interference gets too bad. I’ll leave the timing to you.”

With increased caution, the pair continued to explore.

◆

Another day, another practice session spent shooting virtual monsters. Akira could take down any of them with his current weapon—if he struck their weak points. Which he couldn’t, at least not consistently. Around him lay a growing pile of simulated corpses—his own—gruesomely dismembered in a myriad of reprisals. Looking over the remains, and feeling a great desire not to have his real body join them, served as excellent motivation to practice.

He was beginning to get into a rhythm, and he confidently lined up his next shot with his current target. But before he could pull the trigger, the monster disappeared. Confused, he lowered his rifle and saw that the pile of corpses had also vanished.

“Alpha,” he wondered, “we done already?”

She replied, Someone is heading toward us.

He took out his binoculars—enhanced with Alpha’s support—and peered suspiciously through them. Before long, he spotted Elena and Sara driving toward them. Alarm crossed his face—after all, another pair of hunters had tried to kill him not long before. He wasn’t about to drop his guard just because these two were women.

“They’re not after me again, are they?”

I don’t think so, Alpha hedged. They’re probably just on their way to the Kuzusuhara Town Ruins. But let’s head into the ruins ourselves, just to be safe. They have a car, so we can’t outrun them here if they’re hostile.

Hunters often crossed paths in the wastelands—and often found themselves in competition with each other. So they tended to be cautious of one another, with a “shoot first and ask questions later” attitude that led to unnecessary conflict. When Alpha saw that Akira was already on edge, therefore, she encouraged him to withdraw at once rather than risk bloodshed.

“Got it. Let’s move,” Akira said, shouldering his backpack and jogging toward the ruins. He reached the outskirts and kept going. As much as he had hoped to gather a few relics while he was there, the ruins were crawling with hunters just then. With Alpha’s exceptional help, he could avoid running into people or monsters alike, but he had to remain on the move—hardly ideal for target practice or relic hunting.

Time to change locations again, said Alpha.

“Again?” Akira was getting fed up. “Why are the ruins so crowded? Do hunters usually run into each other this often?”

I’m sure that depends on the ruin. But this one ought to be deserted. You were the only hunter I could find here when we met, and then the other two who we ambushed.

“So they *are* following me, or at least looking for me?” Akira looked nervous. Had he taken out Hahya and Kwahom only to be attacked by a larger group for the same reason?

Don’t worry, Alpha reassured him. Who cares if they’re after you? You’ll be fine—you still have me!

“I know I can count on you, but still…”

Besides, I can guess why these other hunters are here—and it’s not seeking you. So relax! All will be well. Alpha went on to speculate that rumors of previously undiscovered relics had likely motivated the hunters to come out here.

“So that’s it. What a pain.” Akira frowned, although he realized that he had caused the rumors in the first place.

Well, it’s only a rumor, and I doubt a lot of folks really buy it. This fuss will die down when no relics turn up, so don’t let it get to you. Let’s go.

As Akira followed Alpha farther into the ruins, he felt a twinge of guilt. Hunters were wasting time searching for relics that didn’t exist, all because of the rumors he had accidentally caused. But the feeling soon vanished: he had more pressing matters to worry about.

Hiding out in a crumbling building, Akira casually looked out at the ruins through his binoculars. Every so often he spotted one of the hunters and wished impatiently that they would leave.

Akira. Alpha intruded into his thoughts. This is a perfect opportunity to explain the colorless fog.

“The what?”

The colorless fog. It’s been thickening for a while now. Look over there.

As Akira peered through his binoculars, suddenly he saw Alpha, pointing off into the distance.

Compare it to the view in the other direction and try to spot the difference.

“There isn’t one. They look the same.”

Are you sure?

She looked so confident, so expectant, that Akira longed to give her a satisfying answer, even though he only saw the same kind of dilapidated structures in every direction.

“I guess the view on the right looks a little hazier,” he said after a bit.

Exactly! Alpha nodded cheerfully. The colorless fog is denser in that direction.

Akira waited expectantly. “Is that it?” he finally asked.

Far from it. Listen up! What I’m about to tell you is vital knowledge for every hunter in the East.

Alpha explained that the phenomenon which the Easterners called “colorless fog” did not refract light, and so did not appear white like ordinary fog. It was, indeed, hardly visible at all: only a blurring of the

landscape indicated its presence and density. High-performance scouting gear could help with the reduced visibility, but where the fog was densest other phenomena occurred that were not so easily resolved.

In the colorless fog, animals and machines alike struggled to perceive their surroundings. Like an array of powerful jamming devices, the fog blocked radio waves, transmissions, and even sounds and smells in any area under its influence. It rendered active camouflage far less effective, and made other types of concealment nearly useless. Most targeting systems, optical or otherwise, became virtually unusable; wireless—and sometimes even wired—communications became highly unstable.

Many firearms also suffered in the fog. It reduced their force, shortened their ranges, and even amplified deviations in bullet trajectories, making it harder to aim. Where the fog was thick enough, it was possible to follow projectiles with the naked eye.

And while the density of the colorless fog varied by time and place, it was never completely absent in the East. It was usually too thin to be harmful, but the moment it began to thicken its effects intensified. Thus the fog had a powerful influence on the activities of every hunter in the East.

"I get it," Akira said. "This fog is a problem when it gets too thick."

In fact, the boy was far too inexperienced to understand the ramifications of what she said, and the look on his face told her as much.

You don't "get it" at all, she said sternly with a shake of her head. If not for the colorless fog, even monsters beyond the horizon would know your location. You wouldn't believe how good Old World technology is at pinpointing targets. And yet the fog gets in the way.

"Okay, now that is a big deal." Akira nodded, apparently impressed. He understood the importance of staying undetected, at least.

As a result, Alpha added, humans, monsters, and machines all have difficulty spotting enemies when the fog is thick. It even reduces my scouting capabilities.

Now Akira was looking nervous.

In the worst case, Alpha concluded, you may even notice a monster before I do. So for the time being, we'll be staying safe in the city when the colorless fog is thick. It's a shame, but give up on visiting the ruins if its density spikes suddenly.

Everything finally clicked for Akira, and the color drained from his face. "You mean I'll be more likely to run into monsters when the fog is bad, even with your help?"

That's right.

"So, how well do you think I could take on a monster right now?"

If the fog is so dense that my senses can't detect it? You'd never see it before it was right on top of you. You'd never make it out alive.

"And you said the fog is getting thicker right now?"

I did.

Akira raised his binoculars again and began scanning the nearby area for enemies without another word. Alpha knew well that the fog rarely reached the densities she had warned him about, but she said nothing further and smiled to herself.

◆

Elena and Sara had finally stumbled upon footprints that seemed to belong to the child they were seeking. Now they were following the trail, eager to find the unexplored area that the rumors promised.

Such was Elena's skill and focus that she could pick out traces of whatever she was tracking even if they were so faint that a slight breath could erase them. Yet now she was at an impasse. They had followed the tracks into a ruined building, but a search there had failed to turn up any relics of value. Nevertheless, the pair kept following the trail even as the colorless fog thickened around them.

After some time, Sara grew concerned: the distant scenery appeared quite hazy. She turned to her partner. "Elena, the fog's getting a lot worse. Are we okay?"

For a moment, Elena hesitated, so briefly that Sara didn't notice. "We're fine. It is affecting my equipment, but not so much that we need to withdraw."

"Really? I hope you're right."

"Are *you* all right, Sara?" Elena asked with a hint of suspicion in her voice. "If the fog is affecting your nanomachines, we should pull out immediately. If you're not feeling well, tell me; please don't try to hide it."

"I'm fine. I won't pretend that I'm totally unaffected, but I can put up with this no problem."

"All right, but don't push yourself."

"I said I'm fine! I'm keeping plenty of strength in reserve in case I end up having to run out of here with you slung over my shoulder." Sara laughed, hoping a joke would dispel Elena's worries.

"Oh yeah? Was that a crack about my weight?" Elena quipped back, grinning. She was fired up now.

"Just the weight of your gear, of course. That's all. Really. I mean it."

Bantering lightly, each hunter felt reassured that her partner was all right, though each kept some reservations to herself. Elena had been telling the truth: the colorless fog's effects on her gear were not too severe. But the pair of hunters would be in danger if it grew any denser, which she thought likely, and under normal circumstances she would have retreated at this point. Now she was in a bind, however: they wouldn't get paid if they withdrew empty-handed, and without the money Sara would probably put off replenishing her nanomachines even longer, increasing her risk of dying. That wouldn't do, Elena felt, and so she sought to extend their search as long as possible, hardly aware she was doing so.

Sara had been telling the truth as well, but—like Elena's equipment—her physical condition would be endangered if the colorless fog worsened. And

yet, if Sara suggested leaving while the fog was still thin, Elena would probably try soloing the ruins and—without Sara to protect her—would likely die. So Sara wanted to do everything in her power to keep Elena from worrying.

Times had gotten harder for them lately. Once, they had done well off of the more dangerous and profitable ruins, until a streak of unprofitable trips had drained their coffers. A lower budget meant their expeditions had become less efficient—reducing their income even further. It was a vicious cycle, especially since it kept Sara skimping on her all-important nanomachines.

In the middle of these desperate straits, they had heard the rumors.

To turn the wheel of fortune around, a struggling hunter needed either serendipity or a high-risk gamble. If the risk paid off, they could make a comeback as a profitable, competent hunter. Of course, failure could make things even worse instead.

Elena and Sara chose to gamble anyway. Their anxiety ran deeply enough that they were ready to latch onto rumors, betting their futures on odds that they once wouldn't have given a moment's consideration.

Most of the hunters who had followed the rumors to the Kuzusuhara Town Ruins had by this time cut their losses and returned to the city. The thickening fog warned those still searching to follow suit. But a few persisted, desperate for a chance to turn their luck around. When the rumored relics failed to materialize—since they didn't exist—the frustrated hunters refused to go back empty-handed. Instead, they turned their eyes to other, more easily obtainable prizes.

◆

Elena grimaced. She'd failed as an investigator and scout, and she knew it. The colorless fog over the ruins had thickened more quickly than she'd expected, and her greatly reduced scanning range exposed her and her partner to a far greater risk of ambush.

This doesn't look good, she thought. I can't believe it got this bad in such a short time. What a screwup.

"Sara," she said, regretting that she'd taken so long to reach this decision, "we can't go on. Time to fall back."

"Understood."

"Sorry. My detection range has dropped a lot. I should have said something sooner."

Sara could see that Elena felt bad. "Don't worry. There shouldn't be too many monsters here on the outskirts. We just need to be careful on our way back." She smiled, not wanting to suggest that anyone was to blame. Elena grinned back weakly and turned her attention toward finding them a way home. Regrets would get them nowhere.

The pair cautiously made their way back toward the edge of the ruins, where they had parked their car. Usually the outskirts felt much safer than

the ruins proper, but now the dense fog made the area seem menacing. Hunters relied on the range of their firearms to help them survive, and the difficulty of spotting monsters in the colorless fog made it far more likely that they would have to fight dangerous beasts at close quarters.

So when they heard gunfire, the pair cautiously ducked behind some rubble. That they could hear the noise despite the fog meant that the shooters had to be nearby. Sara gripped her gun and looked warily toward the sound, while Elena focused her instruments in the same direction.

"Elena, can you tell anything?" Sara asked.

"Give me a second," her partner replied. "I've got something over there: eight hunters and one monster, I'd say, and they're coming this way."

Hunters fleeing from a large monster. They were firing sporadically behind them as they ran, but the beast seemed entirely unharmed.

Elena gave Sara her analysis. "Looks to me like the monster must be a close-range type that's too tough for their weapons. We'll get caught up in the fight if we sit here, and I'm guessing that thing would overtake us if we ran. Our best bet is to finish it off ourselves."

"All right." Sara aimed a large-caliber firearm at the monster.

"Get out of the way!" Elena shouted at the approaching hunters.

The hunters heard her. Their guns fell silent as they dodged out of Sara's line of fire, even as they kept running toward the two women.

With the monster now close at hand, Elena and Sara could see it clearly with their naked eyes, despite the colorless fog. Muscles rippled visibly under its fur, and it bared its sharp fangs, eager to devour the hunters. As Sara adjusted her aim, something felt wrong—seen through her gunsight, the monster looked relatively unharmed. Till then she had assumed that the monster was too tough for the hunters' weapons, but apparently they had been missing altogether.

Did it deflect their bullets with just its fur, or are they only carrying peashooters? I suppose it's hard to aim while running. But now it's my problem.

Leaving her questions unanswered, Sara squeezed the trigger. A shell pierced the monster's head, and the behemoth toppled in a shower of fresh blood. But even as it fell, the hunters kept running as before. And as they passed the two women, Elena noticed something odd.

Their faces didn't look like they were desperate to survive or glad to be rescued. Even as she realized this, it was too late for her or Sara to do anything: the fog and the monster had preoccupied them. The hunters reached them and ran past without even a word of thanks. As they did so, one of the men dropped something at Elena and Sara's feet. The pair looked down, shocked.

A grenade.

Sara grabbed Elena and tried to bolt. A moment later, the two women were riding the explosion.

Sara managed to shield Elena from the blast, but the impact knocked her partner out of her grip and sent her tumbling across the ground. After an instant of panic, Sara came to her senses and realized that she was lying exposed. Instinctively, she picked herself up and took cover behind some nearby debris. Anxious for Elena's safety, she glanced about and grimaced. Elena was nowhere in sight. Sara was about to call for her—until a man's voice rang out from a short distance away.

"You there! The other one! Unless you want this woman dead, drop your weapons and come out!"

"Sara!" Elena cried from the same direction. "Forget about me! Run away or attack them!"

Sara's heart broke. The men had captured Elena.

Many of the relic hunters in the East died fighting the monsters that lurked there. Their abandoned gear belonged, as a general rule, to any hunter who found it. Occasionally the dead left behind letters requesting burial or leaving their belongings to a relative, but otherwise everything went to the finder.

Some hunters, however, weren't satisfied with the belongings of the dead and took to murdering the living as well. Such bandits tended to lead short careers, which ended when other hunters sought the bounties on their heads.

Elena and Sara had fallen into the hands of one such band. That day, the men had seen the pair's gear and decided to try their hand at robbery instead of relic hunting. Pretending to flee, they had lured the monster toward the women as a distraction. It seemed the pair's luck had run out.

Elena scowled, trying to glare at the men behind her, but she could also feel the gun against the back of her head. This limited her options.

"Shut up," the man said, prodding her harder with the muzzle. "Wanna die?"

But Elena showed no fear. "Shoot me and it'll be the last thing you ever do. Sara! Don't listen to him!"

"I said, shut your trap!" The man behind Elena slammed his gun into the back of her head. She couldn't suppress a grunt of pain.

Hidden among the wreckage, Sara gritted her teeth in distress. She *might* be able to kill all of the men herself, but Elena would almost certainly die too. But if she obeyed the man, coming out unarmed, she might save Elena's life—so long as the men were content to make both women their playthings. No telling what would become of them after that. Sara couldn't bring herself to choose either option.

"Forget it!" another man shouted, loud enough for Sara to hear. "Kill this woman! Then we'll all gang up on the other one!"

"Wait!" Sara nearly screamed—she couldn't help it. Well, there was no going back now. She dropped her weapons and emerged from behind the

rubble with her hands in the air. Elena shook her head furiously, but Sara smiled sadly and then approached the men, moving slowly and keeping her expression neutral to avoid provoking them.

The men leered as they watched Sara approach them unarmed. Several lowered the guns they'd had pointed at her and relaxed, now that she was being cooperative. The gun pressed to Elena's head, however, remained.

Sara gauged the distance as she kept walking toward them.

It'll be fine. They're off their guard, but I'm still too far away. It'll be fine. Fists are enough if I get in close.

Melee combat wasn't Sara's specialty, but she could easily overpower the men—if she ignored her limited supply of nanomachines and pushed her enhanced body to its superhuman limits. The drain on her nanomachines, however, would shorten her life or even kill her. Such was the price of leaving her gun behind—but the price for using the gun would have been Elena's death.

Her mind was made up. A few more steps were all that stood between her and victory.

"Stop right there!" the man barked. "Stop and take off your powered suit!" He sneered as Sara complied. "I'm not looking to get beaten to death by amped-up muscles. We dialed back the power of that blast so it wouldn't wreck your gear, but your suit must still be pretty high-end if you're walking around with barely a scratch. We'll put your stuff to good use. Now, strip down nice and slow."

"Fine," Sara nervously replied. She glared at him—feigning fear to put him off his guard—while she removed her body armor. Stripped down to her underwear, Sara suffered under the men's vulgar grins as they grew even uglier. If only the right moment would come!

If they confused my body armor for a powered suit, they must not realize that I have physical augments. It'll be fine. This will work.

"I took it off," she said, glaring at the men.

"So I see."

A moment later, Sara crumpled to the ground, a bullet hole in each thigh. Elena screamed and ran to her, forgetting all about the gun that had been pressed to her own head.

The man who had shot Sara, Bubaha by name, saw that she no longer posed a threat and turned to his followers. He pointed to her and said, “She’s got nanomachine augments. Strip her naked, and she’s still as strong as one of us in a powered suit. That stuff she took off? Just body armor. I wouldn’t recommend trying anything on her unless you want some bits torn off.”

The men looked at Bubaha in awe. “How can you tell?” one of them asked.

“By the way she moves and how her gear looks, duh.” Bubaha sounded exasperated and a bit contemptuous. “Don’t you even know that? No wonder you guys can never get ahead. Listen, augmentation nanomachines usually prioritize treating injuries. She shouldn’t be up to much until she recovers a lot more, but she’s still stronger than a normal person. Stick to the other woman if you wanna have some fun.” Bubaha pointed to Elena.

The men turned their attention to her.

Meanwhile, Elena cradled Sara, who had been writhing in pain on the ground. Sara smiled weakly. Her internal nanomachines were busy healing her and keeping her alive, which left her in no shape to fight. The two of them were out of options.

“Sorry,” Sara groaned. “I screwed up.”

“Why didn’t you run?” Elena asked, although she didn’t expect an answer. Then at least Sara would have been safe.

“Sorry.” Sara’s single word, though it didn’t answer Elena’s question, carried a world of emotions.

Both women looked away from the sneering men who were approaching them.

Just then, a bullet struck Bubaha squarely between the eyes, killing him instantly. More gunshots followed—at least a dozen before the shocked men could respond. They had no chance to defend themselves, locate the sniper, or return fire. One man cried out as he fell with bullets in his gut and right leg. Another, shot in the arm, shoulder, and chest, toppled to the ground with a scream.

“You bitches!” A man who had avoided injury wasted his chance at escape to shout at Elena and Sara. “Don’t tell me there’s more of you out—”

Elena interrupted him with a shot between the eyes. She and Sara had been startled too, but not for long. Elena wasted no time snatching a gun from the nearby corpse and opened fire on the men still standing. For good measure, she put two bullets in the head of a man who was still breathing.

Confused and peppered by gunfire, the men could not spare any attention for Elena and Sara. As the bandits scrambled desperately to find cover from the sniper, Elena struggled to drag Sara to safety.

“Sara!” she shouted. “Can you walk?”

Sara couldn’t even stand. “Stop, Elena!” she cried, grabbing a nearby gun. “Just run for it!”

“No! That isn’t funny!”

Now some of the men were trying to get a few shots at the women, but the sniper kept them at bay. Under the relentless gunfire, Elena hurriedly hauled Sara into a nearby building.

Inside, Sara propped herself up and swept the muzzle of her gun around, warily checking her surroundings. “Elena,” she said, “what the hell was that?”

“Not a clue,” Elena replied, scanning for hostiles. “But someone doesn’t like those guys much. Maybe we’ve been rescued, or maybe they just want to get their own hands on us. How are your injuries?”

“Give me an hour and I’ll be walking.”

“Okay. Stay put and focus your nanomachines on healing. For now, let’s sit tight and see what happens. We can’t be sure that we’re safe yet.”

The women hunkered down to wait, hardly daring to hope.

Chapter 8: Reasons for Killing

As the bandits had sprung their trap on Elena and Sara, Akira had been watching from his hiding place among the crumbling ruins. When the men were most confident and least on guard, he launched his own surprise attack. Concealed in the colorless fog, he opened fire, and the men never had a chance to retaliate. Their screams echoed in the ruins as the one-sided firefight dragged on.

"Alpha, how many more to go?" Akira asked.

Three are dead. That leaves five. You only killed one, by the way. Those women got the other two.

"Really? That's quite the comeback."

I suppose. She made no attempt to hide her displeasure, and Akira frowned.

"Huh." Akira tried to keep his tone neutral, not wanting to upset her further. "Are you really that set against helping them out?"

Not at all, Alpha replied, all smiles. Yes, she was clearly annoyed. It's good to help those in need, but do you, Akira, really need to put your life on the line for strangers you've never seen before or even spoken to? After all, you're not exactly at the top of the food chain, and—most importantly—I can't have you dying until you finish my job for you. I have told you that I'd be in trouble if you died on me, right?

She was reminding him that her support wasn't free—it was an advance payment for a task she wanted done. And if Akira died doing something unrelated to her business, he realized, he would effectively be running away with her money. No wonder she was unhappy.

"Oh, no, well…" He fumbled for an excuse, remembering how much he owed her. "You're so amazing that I figured this would be no problem. Think of it as proof of how much I trust you to have my back."

Oh, I'm delighted that you have so much faith in my support. Really, I am.

She smiled so forcefully that Akira faltered, intimidated. The only reply he could muster was his own weak grin.

◆

As the men lured the monster toward the women, Alpha detected it while it was still far off. She realized it was out of Akira's league, so she had him move to a spot a certain distance from Elena and Sara, intending that the women should deal with it if needed. And she kept him apprised of the situation, expecting him to flee once combat broke out.

But instead, Akira moved closer to Elena and Sara and began watching events unfold himself. As their situation worsened, he grew unhappy and pensive, and then surprised Alpha even more.

"Alpha," he said, "could I kill all of those guys with your help?"

Are you thinking of saving those women?

“Can’t I?”

Alpha realized that he was determined to help if it were at all possible. Theoretically, she answered doubtfully, yes, you could. But it would still be risky, and I don’t see why you need to get involved.

“So, I’d probably die even with your flawless support?”

It depends, but you would probably survive if we prioritize protecting you. The safest choice is still to not get involved.

“Meaning we *could* pull it off?”

Alpha was forced to agree: she didn’t want Akira to question her support, as that would hinder her own plans. Yet she couldn’t fathom why Akira was so persistent.

We could, she admitted. But would you at least give me a reason? I can’t devise an appropriate plan of action otherwise.

Akira fell silent. Alpha detected unhappiness, frustration, discomfort, loathing, and anger in his expression—but she was mystified as to why. He wasn’t in danger himself and had never met the people who were, yet his emotions were even stronger than when he had been attacked in the ruins. Alpha hazarded a guess: in the past, Akira had been too ill-equipped and untrained to indulge such feelings; now he was comparatively safe, skilled, and well-armed. Perhaps feeling more secure allowed these new emotions to surface. And yet, she concluded, it didn’t explain why he felt them so strongly.

They remained silent until Akira finally realized that Alpha wouldn’t help him unless he gave her a reason to. He briefly racked his brains for a plausible excuse. “I’ll be making a lot more visits to these ruins, and I might get attacked again if guys like them are hanging around. Wouldn’t it be better to kill them off now?”

After another moment of reflection, he added, “Besides, remember how you said that I don’t have any luck left? Good deeds may bring good luck. Maybe I’ll get some back if I help those women out. It’s worth a shot.”

Alpha considered Akira’s answer. Both reasons he had given were excuses—he’d already decided to kill all of the men, and he was just looking to justify his choice. He was giving reasons for the killings, not the rescue. He wouldn’t kill the men to save the women—he would save the women to kill the men.

Alpha surmised that Akira was probably judging according to some inner standard that not even he fully understood. According to that standard, she supposed, the men must deserve to die. But she couldn’t fathom Akira’s criteria.

After another drawn-out silence, Akira looked discouraged. “If it’ll be that hard even with your help, forget it.”

Alpha didn’t want even a fraction of Akira’s negative feelings directed at her, and she did want him to trust her help. A few human lives were a small price to pay if it pleased Akira.

What are you talking about? she responded. She sounded slightly offended and gave no sign of her cold calculations. *My support will make it easy—a piece of cake.*

"Yeah?" Akira said. "Let's do it, then."

All right. Let's make this quick. We'll start by moving into position. Follow me.

And as Alpha accepted Akira's request, Bubaha's fate was sealed—for reasons that had little to do with the rogue hunter or his victims.

With Alpha's full support, Akira launched his surprise attack on Bubaha. Sniping from a secure position, he aligned the blue bullet line with the man's forehead and pulled the trigger without hesitation. Then he continued firing to cover Elena and Sara's escape. And yet, even when he saw that they had made it into a building, he felt nothing like relief—just the thought that he had done what he had said he wanted to do.

Akira, time to move, Alpha said.

"All right."

Akira obeyed. He ducked into an alleyway, cut through a building, and hid behind some rubble. When he reached his next sniping spot, he took aim at the head of a man who had never done him any harm. A tinge of discomfort touched his otherwise indifferent face: he didn't really hate the man—he loathed him. He pulled the trigger. His bullet struck the man's head—far more fragile than the relentless monstrosities it was designed to kill—and collapsed it into a bloody mess.

Akira, time to move.

"All right."

Akira shifted from one sniping spot to another, always moving on before he gave away his position. Alpha guided him expertly, and the men never came close to locating him.

"How come they don't notice me?" he asked, voicing a sudden doubt en route to his next vantage point. "I'm shooting at them from pretty close in."

Because you're sniping at them from excellent cover, Alpha replied. It's not difficult as long as you choose the right terrain. And the colorless fog is making you harder to spot right now.

"But doesn't the fog affect us too?"

Hardly. Do you really think their cheap scanners can equal my scouting power? Here in the Kuzusuhara Town Ruins, they might as well be blindfolded compared to me! And with your lackluster skills, you need that big a handicap to beat them. A serious note entered Alpha's voice. So don't chalk this up to your own ability and assume that you can take down men like them easily. They aren't pushovers. Make sure you're absolutely clear on that point.

"I know."

He'd spoken honestly, and Alpha knew it, but she warned him again regardless. *I hope so*, she said with an encouraging grin. *I really do.*

“I-I said I know,” Akira replied, flustered. Now he worried that he’d sounded overconfident. He hurried ahead cautiously once more.

The one-sided battle continued. Akira knew exactly where his enemies were, and with Alpha guiding him unerringly he picked them off while keeping himself hidden. One after another, he killed the helpless men.

The last one surrendered and begged Akira to spare his life. The boy ignored his pleas and shot him too.

By the time the bandits all lay dead, the colorless fog had begun to lift. But in their panic, the men wouldn’t have had a chance even if the fog had cleared sooner.

It had, after all, been a gathering of unlucky people. Akira, Elena, Sara, Bubaha and his men—all had struggled desperately to claw their way up. All had gambled and tested their limits, hoping for a better life. Those who lost, failed, or screwed up paid the price for all the rest. The men’s corpses, lying scattered across the ground, were hardly the first to fall in the East, nor would they be the last.

◆

The gunfire diminished and—finally—ceased. In the shelter of the building, Elena and Sara waited, but it showed no sign of resuming.

“Is it...over?” Sara asked, settling back.

Elena checked her scanners. “Almost all the nearby lifesigns are gone,” she reported. “I’m only picking up one person apart from us. Probably whoever sniped those men.” With the fog lifting, her instruments were more reliable again: she could distinguish between their attackers and others with certainty. But that didn’t mean that the latter were friendly.

“Elena,” Sara asked, “does it look like whoever it is will come this way?”

“Not as far as I can see. What do you think they were after?”

“If I’m being optimistic, then I guess someone who happened to be nearby bailed us out, even though they were outnumbered eight to three—eight to one excluding us. That would make them one hell of a do-gooder. I hope that’s what happened.”

Sara left the alternative unspoken. No one is that nice. I’m grateful for the rescue, but who knows what they’ll demand in exchange. If it’s a man and he’s after our bodies, I wonder if I could get him to settle for just me. Of course, Elena will object.

Watching the unknown party on her scanners, Elena realized that it was moving away from them. Aren’t they going to check on the people they just saved? she wondered. If they wanted a reward, they’d come demand one right away. So why aren’t they? To avoid any more conflict? Because they just lost interest? Or do they want to scavenge the bodies first?

The lifesign moved farther away. Elena hesitated, then decided to pursue it.

“I’ll be right back,” she said. “You wait here.”

“Are you sure?” Sara asked, looking anxious.

“I’ll be fine. The colorless fog is a lot thinner now, and I’m not picking up any hostile signs. I won’t overdo it, but I’ve got to at least say thank you.” Elena reassured her partner with a quick smile, then grabbed a few things and left the building alone. Since she didn’t have to worry about other enemies—her instruments were clear on that point—she set off after Akira at a run.

As she drew close, however, the signal on her instruments’ display suddenly gained speed—he was rushing to put distance between them. He was hidden somewhere ahead of her, and although she couldn’t see him, she knew her voice would still reach him.

“Wait!” she hurriedly shouted. “You’re the one who saved us, aren’t you?! I want to thank you, and to ask you something too! Won’t you come over here?!”

Something came flying from Akira’s direction. A balled-up piece of paper arced through the air and landed at Elena’s feet. She picked the paper up, unfolded it, and saw that it had been wrapped around a rifle cartridge. “Stay away” was scrawled on it.

Was the cartridge just meant to weight the paper, or was it also a threat? Elena couldn’t be certain. Since their savior seemed to want her to keep her distance, she remained in place and shouted louder.

“My friend has been shot and she can’t move! Our car is parked near the outskirts, so please, help me carry and guard her on the way there! I’ll pay you for all your help! I know it’s asking for a lot, but would you please assist us a little more?!”

Elena had no idea what she would pay with. Certainly not with money—that was needed for Sara’s nanomachines. She was prepared to bargain, and even to chip in her own body if necessary.

Another object came flying—a box that contained medicine, according to the writing printed on its side. Further inspection revealed a piece of paper wedged inside, with treatment instructions scribbled across it.

Elena decided that her mysterious benefactor intended the medicine for her partner. She also took the hint that they wouldn’t agree to help protect the pair. Before returning to Sara, she hastily jotted something down on the paper and left it on the ground.

“All right!” she called. “Thank you for the medicine! I’m going to leave now, but I wrote my hunter code on this paper, so feel free to get in touch!” She bobbed her head in Akira’s direction and then retraced her steps toward Sara.

When she was gone, Akira came out and picked up the paper. She had added her hunter code to it, but he just stared quizzically at the string of characters.

“Alpha, what’s a hunter code?” he asked.

Nothing to worry about until you get a data terminal, Alpha replied. Just remember that another hunter’s code comes in handy when you want to contact them.

“Huh. That’s news to me. Do I have a code too?”

No, but the Hunter Office should assign you one once you have a data terminal, assuming you go through the proper procedures. More importantly, Akira, are you sure you don’t want to meet them?

“Yeah, I’m sure. There’s no point in going out of our way. Let’s hurry up and head home.”

Aren’t you going to take those men’s belongings with you?

“I’ll leave them. It’s not like they attacked me or anything.”

I see. She did not, in fact, see. Akira had made certain to loot the corpses of the two hunters who had attacked him before. Why were these men any different? She decided that Akira must have criteria of his own.

Yet what principles governed his behavior? The boy had rescued the women without need, without regard for his own safety, and for what? He had received no reward, and had even given them some of his precious medicine. And yet, he had refused to guard or even meet them, as though he had no interest in what happened next. Alpha didn’t bother asking him why—she knew that would be as pointless as it had been when she demanded a reason to help the women. Nevertheless, she continued to speculate, hoping for insight that would help her guide Akira in the future.

Akira and Alpha wasted no time putting the ruins behind them.

◆

Sara smiled weakly when Elena returned and told her what had happened.

“So, some complete stranger helps us out, saves our lives, even gives us medicine, and then leaves without introducing themselves, let alone asking for a reward,” she said. “When you cherry-pick the good parts, it’s the kind of thing that might make you fall for someone.”

It painted an attractive picture, as far as it went, she thought. Even so, her smile became strained.

“But they won’t let us see them, hear their voice, or get near them,” Sara continued. “And their handwriting is messy—maybe on purpose, to stop us tracing it. That suddenly makes them hard to trust.”

Elena returned Sara’s tense smile, likewise suspicious. “Do you want to hold off on using that medicine?” she asked. “You’ll recover if we wait long enough, won’t you?” She wasn’t anxious to think ill of their benefactor, but Sara would be the one taking the medicine, and Elena didn’t want to force it on her.

Sara shook her head. “No, I’ll take it. Staying injured won’t do me any good.” She didn’t add that she would have felt differently if Elena was the one in need of the medicine.

Sara opened the box, removed a capsule, and placed it on her palm. The next step would normally be to swallow it. But she scrutinized the capsule as she remembered the directions scrawled on the cheap paper: In an emergency or when time was of the essence, they said, apply a capsule’s contents directly to a wound instead of swallowing it. Expect intense pain.

Sara hesitated. She was certain the medicine wasn't intended to be used that way. It might make her injuries worse. Nevertheless, she decided to give it a shot.

She opened several capsules and applied their contents to the wounds on her thighs. As the note had warned, agony ensued. But alongside the pain, she felt something forcibly repairing her injuries.

Elena watched Sara's evident distress with concern. Gradually, the torment subsided. After a minute, it was almost gone. Sara tried to stand and found that it only hurt slightly.

"Are you sure you should be doing that, Sara?" Elena asked, watching her with a touch of surprise.

"Don't worry," Sara assured her. "It looks like that stuff really worked, because I'm ready to fight no problem. Maybe you should try some too." She took an additional dose herself—swallowing a capsule this time, as her situation was no longer urgent.

Taking her advice, Elena tried some of the medicine as well. She wasn't seriously injured, but she was battered and exhausted. She needed to recover as much as Sara did.

Before long, Elena felt the pain in her head rapidly fading. Experience told her that the medicine had not simply suppressed the pain—it was actually healing her head injuries at an incredible rate.

Thanks to the effects of the medicine, Elena and Sara began to think of Akira as a savior who was not suspicious, but rather had reasons for secrecy. They grinned at each other, feeling ashamed of their lack of trust, however necessary it might have been.

Sara laughed to shake off the mood. "Anyway, now we know that whoever saved us is generous. I don't know what company made this medicine, but anything that works this well must have been expensive. I'm not sure I like owing someone this much and not even being able to say thank you."

"I wrote down my hunter code for them, but I don't even know if they read it, let alone if they want to get in touch."

"That's up to them. Still, let's make sure we can pay them back if they ever do."

Elena laughed too. "Good point. Let's focus on what we can right now, and say 'thanks' by stripping the gear off those guys. Our savior doesn't seem interested in their stuff, and selling it will pay for your nanomachines."

"Man. We just keep racking up debts to whatever-their-name-is today."

"You said it."

Both women laughed again.

Elena and Sara salvaged everything they could get off the men and returned safely to the city. Following the rumors had been a gamble, and they'd almost paid for it with their lives—or worse. But they made enough

money off the men’s belongings to turn their declining fortunes around. They had won their bet.

Chapter 9: A Real Hunter

After the excitement of killing the rogue hunters and rescuing Elena and Sara, Akira returned to his routine of training or gathering relics. The encounter with the bandits and the women had done nothing to alter his life, after all.

The rumors about easily accessible relics had already subsided. In the first place, Alpha could now tell which relics could be sold without drawing attention; she had Akira hide most of the treasures he found, especially the more valuable ones, instead of bringing them to the exchange. Akira had also improved his equipment substantially, so he no longer sparked tales of a barely armed child selling relics. And of course, no hunters found the alleged trove of relics either. Before long, therefore, the stream of interested hunters to the Kuzusuhara Town Ruins had ceased.

As a result, Akira's relic hunting was going smoothly, but his finances had worsened. He'd had to downgrade from his hotel room that cost twenty thousand aurum a night to one that cost merely four thousand: a cramped, plain room whose only luxury was a shower. Naturally, its comfort put sleeping on the streets to shame, but Akira found himself missing the comparative opulence of his previous place. He grumbled that he wanted to return to a room with a bath soon.

Alpha cheerfully retorted that he could go back to life with a bath as soon as he could sell high-cost relics without raising eyebrows. That lit a fire under him. Alpha observed the change in his motivation, as she analyzed every detail from behind her smile.

Nothing broke this routine until the day Akira completed his tenth sale at the exchange. He was about to take his payment and leave when Nojima stopped him.

"Hang on. I've got this for you today," the official said, handing Akira a plastic card and a paper map. The latter gave directions to a destination near the city wall. "You've got some red tape to deal with. Just show that card to the officials there. Good luck, Ajira."

"My name's Akira," the boy muttered.

Nojima burst into a chuckle. "You're 'Ajira' in the database. I don't know who registered you, but they sure did a half-assed job. You can fix it while you're dealing with that red tape, so get going."

Nojima said no more, but he seemed to be in fine spirits as he watched Akira go.

The walls around Kugamayama City's middle district were so sturdy that, if an onslaught of monsters reduced everything outside to ash, everything inside the walls would remain untouched. The solid, towering fortifications were a physical, economic, and social barrier between those

who lived within and those without. Seeing their vastness up close could take one's breath away.

The Kugama Building was a massive skyscraper that had been built into the walls themselves. It served both as an economic link between the inner and outer cities and as the seat of the local government. It also contained a major branch of the Hunter Office. There was a world of difference between this state-of-the-art facility, which oversaw all hunter activity in Kugamayama, and the rundown outpost where Akira had first registered.

Akira faltered as he looked up at the edifice. It had been built as a monument to the political, financial, and military power it housed, and it easily overwhelmed the child from the slums. And the mark on his map pointed directly toward the Hunter Office branch inside.

This is the place, right? he asked.

That's right, Alpha replied. Let's go inside.

Y-Yeah.

Alpha passed nonchalantly into the building, and Akira nervously followed. Without her prodding, he would have stood there a long time trying to summon the courage to enter.

As they approached the Hunter Office on the first floor, Akira stared in awe at the many hunters in the grand lobby—real hunters. From veterans in top-of-the-line powered suits to steel-skinned cyborgs, all were worlds apart from neophytes like Akira.

Relax, Alpha said. They're not enemies, and they're not going to attack you.

I kn-know that, Akira snapped.

I'd like to get these formalities over with, and you standing there quietly isn't helping. Do you know what to do?

N-No, I don't.

Then follow me.

Alpha deftly guided the street boy through the bewildering procedures. With the card from Nojima, he went to a terminal and signed up for an appointment; the machine spit out a ticket, which he took to a quiet corner to wait. When his turn came, he went up to the appropriate window and presented his ticket and card to the woman behind the counter.

"I'm supposed to show you this," he said.

Surprise flashed across the official's face when she saw the card, but she quickly recovered her professional smile.

"Of course," she said, taking the card and scanning it into her computer. "Would you please confirm that you are Mr. Ajira?"

"Oh, yes. I mean, no," Akira answered nervously. "My name's Akira, and, um, I said it right, but it got registered wrong."

The official bowed politely. "My sincere apologies," she said. "Then, Mr. Akira, allow me to congratulate you on your promotion to hunter rank ten. Let's confirm your registration and reissue your hunter ID. Do you need me to explain the procedures or anything else related to your visit today?"

“Huh? Oh, yes, please.”

Seeing that Akira looked completely lost, the official gave him a friendly smile. “Very well,” she replied. She knew her job well, and began explaining to Akira the ins and outs of the registration process.

The Office graded hunters with a standardized ranking system, starting from rank one. Generally, the organization deemed hunters more capable as their rank increased. A hunter could raise their rank in a number of ways, such as by selling relics to or undertaking requests issued by the Office and its affiliates. Hunters were promoted if their work benefited the Eastern League of Governing Corporations, or ELGC.

The ELGC placed considerable trust in high-ranking hunters, and the Office gave them preferential treatment. These hunters had ready access to the elite districts of the city and were allowed to hunt relics in restricted ruins, which the large corporations monopolized. They got priority when waiting for appointments or services. And they also had access to certain weapons and gear—models that were particularly expensive, rare, or powerful—that the Hunter Office limited the sale of to low-ranking hunters. They could even choose commissions from the Office and its affiliates that lower-ranked hunters were not allowed to take on—or in some cases, to even know about. Given these benefits, not to mention respect and fame, it was no wonder that many hunters obsessed over climbing the ranks.

Akira’s current hunter rank was ten. In other words, he had a valid ID and a decent hodgepodge of gear. It was, in short, the rank of a beginner.

Unlike rookies from better backgrounds, slum dwellers and others who lacked corporate or municipal ID cards were registered as rank one hunters. They existed in the system merely as names on slips of paper. Once they sold enough relics, the Office would promote them up a rank—but behind the scenes, without disclosing it to the hunter. When—if—they reached rank ten, the Office would inform them, as Nojima had told Akira. They could then join the hunters regarded as having real potential.

The card from Nojima was proof that Akira had worked his way up from rank one. Most hunters from the slums either gave up or died before they made it that far, but the few who did were rewarded with modest perks—like not having to pay the first time their IDs were reissued.

With that, the official handed Akira a pamphlet—printed on premium paper. On its cover were the logos of the ELGC and the Hunter Office, and inside it contained a more detailed account of what she had just told him, plus other information of interest to hunters.

Next she began the process of registering him. “Mr. Akira,” she said formally, “you have requested a revision to your registered name. Please repeat the revised name you wish to register.”

“Akira,” he replied, a bit flustered.

The official continued, all business. “Mr. Akira, this process will upgrade your status from provisional to full registration. We do this primarily to add any relevant data to our files. However, since your name was incorrectly

recorded due to an error on our part, we will accept a change to your record. Please understand that any future changes will have to be reviewed and may be rejected depending on the findings of the review process."

In other words, it wouldn't be so easy to change his ID in the future. She added, "Your name is one of the data points that the Hunter Office uses to identify you. It represents who you are as an individual. Names sometimes include a person's lineage, home, nationality, cultural identity, or class. Are you certain that you wish to register simply as 'Akira'?"

Akira was nonplussed. He didn't belong anywhere. He had no family, nor any memory of one. He had lived in the Kugamayama City slums as long as he could remember, but he felt no attachment to them—he had only stayed because he couldn't leave. Nor did he belong to any of the slums' numerous gangs. He had always acted alone: he was simply "Akira." If he changed his name, no one would care. No one ever called him by name, anyway—until he met Alpha.

After a brief silence, he stared up at the official and said, "Akira. My name is Akira. Please register that. If I ever want to change it, I'll deal with it then. And if it turns out I can't, I feel like that would mean I shouldn't, anyway."

"As you wish." The official entered something into her computer and handed Akira his new hunter ID. Akira stared at the stiff plastic, so unlike the cheap scrap of paper he'd grown used to. He felt that the change from paper to plastic represented a deeper transformation as well.

"Please take care not to lose your ID. It cannot be reissued without a fee and an investigation. At worst, you may lose all records of your accomplishments and be treated as a new registrant."

The official gave him a pleasant smile and bowed. Was she simply being professional, or was there a hint of respect toward his new status as an official hunter?

"Your registration is now complete. I sincerely look forward to working with you, Mr. Akira."

Outside the Kugama Building, Akira couldn't take his eyes off his brand-new hunter ID.

Alpha laughed cheerfully. You're finally a hunter, Akira, she said. Congratulations.

Thanks, he replied. Wait, wasn't I already a hunter?

In name only, until now. I'm sorry to say that other hunters would have laughed at you if you'd introduced yourself with that slip of paper.

You're probably right. Akira looked pleased as he studied his ID. He read his name on the card—spelled correctly this time—and grinned.

"So, I can finally call myself a hunter," he said to himself.

His new hunter ID would also serve as his personal identification going forward. It wouldn't do him much good—to most businesses, it would only mark him as a rookie hunter—but it was still a big step. He was no longer

an undocumented boy from the slums—that life was behind him. Someday, he would be able to present his ID, and it would mean something—and on that day, he would have made it as a hunter.

Since Akira didn't seem inclined to stop staring at his ID any time soon, Alpha needled him. *Stop ogling that thing and put it away. Do you want to make people suspicious?*

Akira hastily tucked it away. More security guards patrolled around the Kugama Building than in most of the lower district, and catching one's eye would lead to a lot more trouble than in other neighborhoods.

All right, Alpha announced, now that you're a fully registered hunter, let's go buy you the piece of gear that every hunter needs for a complete ensemble.

What are you talking about?

A data terminal. And with that, Alpha led him off toward a nearby terminal shop.

The internet was an invaluable source of information to a hunter. Here you could swap, share, buy, and sell all kinds of intelligence: locations of ruins, their internal structures, and details on the monsters that inhabited them, to name just a few examples. The more hunters made use of this knowledge, the more successful they were likely to be, and their success fueled the flow of relics into the East and invigorated its economy.

The information network owed its existence in part to the wide availability of data terminals. Tatsumori Heavy Industries mass-produced models that balanced high performance with affordable prices, and now every self-respecting hunter carried one. Tatsumori's long-standing and substantial influence on markets catering to hunters had launched it to record heights, making it a governing corporation whose reach extended throughout the East. Under Tatsumori's influence, the ELGC employed data terminals as a key part of its strategy to conquer the region. This led to greater production and even lower prices, until even someone like Akira could afford one.

As hunters grew more and more to depend on data terminals, they also came to use them for finding jobs from both corporations and the Hunter Office. In short, thanks to a variety of causes, terminals were now considered indispensable for hunting.

In the shop, Akira bought the data terminal that an employee recommended to him. It cost nearly all the money he had left.

While he was there, the employee went through the process of setting up the device. The various settings and options meant nothing to the boy, and he would have been at a loss on his own. But when the employee told him he needed a hunter ID if he was going to configure the terminal for relic hunting, Akira was pleased to have an opportunity to use his new card so

soon.

His elation over his new ID and terminal did not last long. Back in his cramped hotel room, Akira reflected glumly on his most immediate concerns.

"Alpha," he said, "I can't even afford a room for tomorrow night after buying this terminal. Is that gonna be a problem?" He had come to rely on Alpha, expecting her to reassure him.

Of course it will, she cheerfully declared. That's why we're going back to the ruins tomorrow.

Akira stared at her reproachfully; she met his glare with a silent smile. He was tired of trekking through the ruins. But Akira knew that he was no match for Alpha in an argument, and that if he pressed her she would most likely talk him around to her view. Besides, the terminal was probably worth what he had spent. He sighed and looked away.

In any case, if he would be making another trip the next day, he figured it would be better to turn in early than bother with pointless arguments. He still had questions, but he left them unsaid.

We won't have to worry about ammo, Alpha added. We still have some left over.

"I guess," Akira sullenly replied.

Starting tomorrow, you'll be using your data terminal when we explore the ruins. Help me configure it now.

"Huh? Didn't we just do that at the store?"

Those settings were for ordinary hunters, Alpha explained. We're about to configure it for you. I'll go all out reprogramming it so I can help you better. But I can't access it yet, so I'll need you to do the first steps for me.

"You mean you'll make it easier to use? Okay."

We won't be done until midnight at least, so hang in there.

"What?!" Akira stared at Alpha incredulously. But her smile never changed, and once he realized that she was serious, his face fell. He suddenly felt more exhausted than ever.

Under Alpha's guidance, Akira tapped away on the terminal's touchscreen. Strange figures, symbols, and what might have been letters flashed by, replaced by more of the same—none of which meant anything to him. He carried out Alpha's orders mechanically, understanding neither what he was doing nor why he was doing it. If he endured that mind-numbing torture much longer, he felt, it would crush his mind altogether.

The simple, monotonous tasks that he did not understand began to lead Akira's thoughts into strange channels. What was he doing? Was this really configuring a data terminal, or was it one of those occult rituals he'd heard rumors about? Was he unknowingly about to summon some unearthly entity?

As Alpha had warned him, his work dragged on into the night. Akira went on mindlessly fiddling with his terminal until at last he finished.

Akira, that's enough, Alpha said.

"Is it finally done?" he asked.

The configuration isn't, strictly speaking, but you've done your part. I'll take it from here, so get some rest.

Seeing that it was after midnight, Akira felt exhaustion overwhelm him. He toppled into bed, leaving his data terminal on the floor nearby, and gave into his weariness. As he slept, the terminal continued to work away all night.

The next morning, Alpha's voice woke him as usual. But when he looked in her direction, she was nowhere in sight.

"Alpha?" he asked.

"Down here," she said, sounding different somehow.

Puzzled, Akira looked at where her voice had come from and saw her waving cheerfully at him from the screen of his terminal. That's what was different: he had actually heard her voice, not just received her telepathic message. It didn't help that the terminal had rather cheap speakers.

He picked up the terminal and looked the Alpha on its screen in the eye. She flashed him a proud grin.

"What do you think?" she said. "I took over this data terminal! Cool, right?"

"Huh? Well, I guess."

Alpha frowned—sure, he had just woken up, but she had expected more of a reaction nonetheless. "You don't seem enthusiastic. I thought you'd be more surprised."

"Compared to a woman I can see but not touch, or being able to zoom in on things I see? Not really," he responded. "Besides, are you going to make me talk to you through this thing from now on?"

"If you'd prefer. Would you?"

Akira considered. Pretending to be indifferent, he replied, "Go back to how you were before. Looking at my data terminal every time we talk would get annoying."

"All right." Alpha vanished from the data terminal's screen and stood beside Akira as usual. She had a far greater presence in this form, and she drew her face close to his, wearing an impish grin.

So, she said enticingly, you'd rather have me close to you like this than on that tiny screen?

"Yeah, I would," Akira replied offhandedly, not meeting her gaze. She was pleased to see him blush.

◆

Akira stood in the desert just outside the Kuzusuhara Town Ruins, psyching himself up. He felt very motivated—not because this was his first expedition as a full-fledged hunter, but because purchasing a data terminal had left him too poor to rent a room for the night.

Now that he was a fully licensed hunter, he had other options for making money if he wished. He could accept jobs that cities and other clients issued through the Hunter Office, or take on security work such as patrolling the city's outskirts.

But Alpha told him that gathering relics and training was the most effective way for him to develop his skills, for the present, and he trusted her judgment.

That didn't change the fact that he was nearly broke. If he returned empty-handed, he would be back to sleeping on the streets of the slums. He was now so accustomed to luxuries that even his current hotel room felt cramped, and he was anxious to avoid another night on the far less comfortable ground of a back alley.

He took a deep breath and steeled himself. Looking determined, he prepared to advance into the ruins.

"All right," he said. "Let's go."

Wait a second, Alpha halted him.

Akira turned to her, annoyed. "What for?" Perhaps he sounded overconfident, because her next words rocked him.

You know your way around a weapon fairly well now. As of today, let's focus on something new. I'm going to teach you how to handle yourself decently well even without my scouting. So don't expect me to point out enemies for you once you enter the ruins now.

Akira was visibly shaken. Alpha's ability to point out enemies was his lifeline, and he had a pretty good idea how he would fare without it.

"A-Am I gonna be okay?" he asked, obviously uneasy.

No, Alpha smiled innocently. That's why you need training.

"I g-get that, but—"

All at once, Alpha's look turned grim, stopping the words in Akira's mouth.

Once you grow as a hunter, she said, you'll have more opportunities to work in other ruins. There are limits, after all, to how much you can earn in Kuzusuhara. But I'm sorry to say that my scouting will be far less effective anywhere else.

"How much less, exactly?" Akira asked hesitantly.

At worst, I may lose the ability to locate threats at all.

Akira couldn't help grimacing. He knew how fatal that would be to him in his current state.

I'll still support you to the best of my ability, of course, Alpha added. But I can only do so much. That's why I want you to learn how to navigate a ruin now. Do you understand?

"Yeah," Akira reluctantly agreed. "But this is just training, so you'd better warn me if I'm in real danger."

And Alpha's signature smile was back. Of course. But I want you to forget that and take this seriously. You won't learn anything otherwise.

"G-Got it."

Go ahead, feel free to do whatever you like in there. I'll warn you if you're in danger or screw up. Now, begin.

Akira breathed deeply to steady his nerves. Even though he knew Alpha would still be scouting ahead, and that this was only a training exercise, the thought of going on without her guidance made the ruins suddenly appear far more threatening.

In fact, he was in even greater danger than he imagined; Alpha's presence had merely dulled his awareness of it. He had felt safe in the ruins because he could count on her backup, not because he truly understood the ruins themselves. But even though he had an inkling of this, he was determined to move forward.

Stop, Alpha commanded. He'd messed up, and he wasn't even in the ruins yet.

"Already?"

First, point your binoculars at the ruins. Check for monsters. When you spot one, ask yourself if you can beat it, if there's a safer route, and if you should turn back. Think carefully before you decide.

That sounded reasonable to Akira. He grinned, embarrassed at how green he still was to neglect such basic safety measures. Watching through his binoculars, he saw no monsters. They might be in hiding, but just knowing that made him safer than when he hadn't even checked.

"It looks all right," he said.

Now check your data terminal, Alpha advised him.

Akira looked at the device fastened to his arm. A sturdy strap—designed specifically for hunters—secured it firmly in place where he could view it easily. On its screen, a small, stylized Alpha pointed to an icon. When he pressed it, a map filled the display.

That shows the Kuzusuhara Town Ruins, Alpha explained. Even if you don't have a specific objective in mind, you shouldn't just explore at random. Plan out your search area and travel route in advance.

The map only charted a portion of the Kuzusuhara outskirts—a tiny fraction of the massive ruin.

Identifying places where you're likely to find relics is important, but planning how you'll get there is even more vital. Be mindful of escape routes in case you encounter monsters, and adjust your plans on the fly if needed.

"Easy for you to say," Akira grumbled, "but how am I supposed to 'be mindful' of all that?"

Figuring that out is part of your training.

Akira scowled at the map. The sheer quantity of information it displayed was overwhelming, and he was hardly the first person to find it daunting to sift through all the data and plot a route. But he did his best.

◆

A vast number of buildings were crumbling amidst the debris of the Kuzusuhara outskirts. Akira now had many trips here under his belt, but the

look on his face at that moment suggested that the previous visits had been just a walk in the park by comparison. He cautiously picked his way along, trying to watch his surroundings. But he was still an amateur, and who knew how many dangers lurked on the other side of the vacant windows and mounds of rubble that he passed?

He would never get anywhere if he imagined enemies in every shadow, but he didn't have time to check them all. And yet overlooking a concealed threat in a real fight would get him killed. The ruins were full of such perils, but that didn't stop hunters from returning to them day after day. They would keep putting their lives on the line until the day they won a reward worth the risks they ran—or lost everything.

Alpha stopped him with a correction every few steps—sometimes every step. He had so many things to learn: how to walk without leaving tracks; how to tell which routes were safest from ambush; how to quickly find a stance for counterattacking on unstable ground; what his priorities should be when he surveyed his surroundings; and many more.

It took him an hour to cover a distance that he could normally have walked in a few minutes. He encountered no monsters, but staying so alert fatigued him anyway. Alpha, seeing how tired he was better than he himself could, decided to wrap up that particular exercise.

I think that's enough for today, she said. There are no threats nearby, so feel free to relax.

Releasing his tension, Akira let out a long, tired sigh. Then he turned to check his progress and saw the border where the ruins met the desert not far behind him. He sighed again, disappointed in himself.

"That's all the ground I covered? Looks like I've got a long way to go."

You'll move faster as you gain experience, Alpha replied. And detecting enemies will become a lot easier once you have scanners and other high-end equipment. Slowly and steadily improve yourself by training and upgrading your gear. Don't worry—you can count on me!

The sight of her comforting, confident smile helped restore Akira's morale. "You're right," he said. "Rushing will get me nowhere."

Exactly. Now, let's do some normal relic hunting. I'll scout ahead as usual, so follow me.

Akira continued deeper into the ruins, relying entirely on Alpha to detect threats. In a few minutes, they made more progress than he had managed in the previous hour.

Collapsed buildings and other obstructions had transformed the town's once-organized streets into a maze. Akira compared the map on his data terminal to their surroundings with a look of confusion.

"Alpha," he said, "it looks like there are a lot of mistakes on this map."

Of course there are, Alpha agreed, as though nothing could be more natural.

"Really? Why 'of course'?" he asked, startled.

It's available for free on the internet, so it's fairly inaccurate. If you need a better map, you'll have to buy one from a trustworthy source.

Akira groaned as he studied the map. "They cost money, huh? Well, that's not too surprising."

Just so you know, even expensive maps reflect information from whenever they were made. So there's no guarantee that they match the current lay of the land. Powerful monsters can cause so much destruction that they change the terrain, and hunters sometimes accidentally level whole buildings while trying to blast through walls to get at the relics inside.

Akira remembered the colossal machine that had attacked him. Its massive artillery had demolished buildings, transforming the nearby landscape. So much destruction could render even the most detailed map meaningless. He nodded, apparently convinced.

Plenty of other things can cause massive discrepancies between what maps show and the reality on the ground, Alpha continued. Deciding how much to trust your map before executing your plan is part of your training.

Some hunters, known as surveyors, made a living by making and selling various kinds of charts of the ruins. Detailed maps of a particularly perilous ruin—revealing its structures, varieties of monsters, and relics previously unearthed there—sometimes sold for higher prices than the relics themselves.

Akira listened to Alpha's explanation with interest. Till then he had thought of hunters rather simplistically as people who found relics, fought monsters, and somehow turned a profit in the process. The possibilities of surveying came as a startling revelation.

"I never knew you could make money that way," he said. "Is it enough to live on?"

You're far more likely to make it back alive if you go in with an informed and well-thought-out plan, instead of charging in blindly, Alpha replied. I'm sure a lot of hunters will pay good money for that security when they can.

"So, studying up on ruins ahead of time is part of a hunter's skill?"

Exactly. I shouldn't need to tell you how reckless it was to go into the Kuzusuhara Town Ruins without knowing anything.

Akira grinned ruefully, remembering his first encounter with Alpha. "You've got that right. That was seriously dangerous. I'm sure I would've died back then if I hadn't run into you. Thanks."

Thank me with your actions, she said, smiling boldly. Finish the job I gave you. Not that I want to rush you, of course.

"I will. Try to be patient," Akira replied lightly. But despite his tone, he meant what he said.

I have high hopes for you. Alpha also spoke sincerely, but her words by no means said everything she thought.

◆

Akira checked his finds before heading back for the day.

“Alpha,” he said, “is it me, or is today’s haul bigger than usual?”

I upped the quantity a little because you’re a real hunter now, Alpha replied. We’ll keep increasing it a little at a time from now on—in keeping with your ability, of course. You’ll need to earn more to afford better equipment and ammo. Better training, education, and relaxation too. You want to sleep in a room with a bath, don’t you?

“You bet I do.” Akira nodded emphatically. “Speaking of which, don’t you think we should bring back just a few more relics?” He looked at her expectantly.

No. Alpha crushed his hopes with an indomitable smile.

“Fine.” Akira sullenly relented, his head drooping in disappointment. This did not dismay Alpha in the least.

Chapter 10: A Dropped Wallet

Back from the ruins, Akira slunk through the slums. His backpack was stuffed with more relics than usual, and a sharp-eyed observer who spotted the bulges in its fabric would have no difficulty recognizing him as a hunter returning with a successful haul.

Public order in the lower district generally improved the closer one got to the city walls, which meant it was worst in the slums bordering the desert. Returning hunters keen to avoid trouble often detoured around the area as a result. There were always some slum dwellers foolhardy enough to turn violent, blinded by their greed. Generally they paid for it by joining the many corpses that littered the streets—monuments to the difference between those who battled monsters in the wastelands and those who did not.

Akira took the route through the slums regardless. It was a shortcut to the exchange, and growing up in the slums himself had inured him to their lawlessness. Since becoming a hunter, he had passed through them frequently without incident—but not this time.

Akira, Alpha warned him, you're surrounded.

He halted and looked around, but he didn't see any ambush. The street just seemed a little more crowded than usual. Nevertheless, he trusted Alpha's ability to spot enemies and prepared himself for the worst.

Can I take them? he asked. Even if he was really surrounded, there were many possible explanations. Someone might just be looking for a fight or hoping to intimidate him. Or he might have walked into a trap meant for someone else. And yet he was already acting on the assumption that he was the target—and plotting a preemptive strike.

Are you planning to fight them? How far will you go this time? Alpha asked, remembering how he had been willing to kill without hesitation when he had rescued Elena and Sara.

I'll run if it looks hopeless, he replied. What happens next is up to them.

If they tried to threaten him with superior numbers and he didn't back down, they would probably decide that he wasn't worth their time. Akira would let them go—so long as he could do so without parting from any of his relics. He was a hunter now, and he refused to abandon his earnings just to escape like a typical slum kid ever again. And so, it was up to his would-be assailants whether he killed them. He was prepared to do it if necessary.

Alpha considered. Whereas Akira had previously slaughtered an entire group of people who had not even threatened him, he now seemed willing to negotiate with one that would. She found his behavior inexplicable, but she also judged him likely to come out on top.

If that's how you feel, I won't stop you, she said. But be sure to follow my instructions if I decide you're in danger.

I know, he replied. I'm in no hurry to die.

As Akira stood there, still and alert, his opponents completed their cordon. Slum dwellers blocked the road behind him and any of the side streets that might offer escape. Then three men emerged from the crowd ahead of him. Unlike the others, they wore body armor—albeit stained and damaged—and they held not handguns but anti-monster weapons. Washed-up ex-hunters. Akira immediately recognized them as the leaders of the group.

"Sorry, but I'm not rich enough to pay a toll," he said, keeping his voice firm to prove that he wasn't scared. "Would you try someone else?"

The trio burst into laughter. Then the middle man, Syberg, shook his head. "You shouldn't lie," he said. "You're carrying plenty on your back, and I bet there's more wherever that came from."

Wariness crossed Akira's face. Syberg saw it and sneered, his suspicions confirmed. He hadn't singled out Akira entirely by chance—he had been keeping his ear to the ground for news of promising targets.

Gangs in the slums were often led by ex-hunters. These bosses, failing to make their fortunes in the wastelands, turned their skills and gear on their neighbors in the slums. They actively recruited underlings, or the underlings flocked to them, until they had small organizations under their command.

Syberg was one such leader. His gang was not massive, but it was powerful enough to control a mid-size base of operations in the slums—and for its network of informants to catch wind of Akira.

"You're from the slums too, ain't you?" Syberg asked, grinning as he imagined the contents of Akira's backpack. "Then we oughta help each other out. I've got a lot of people in my gang, and we're strapped for cash." The ex-hunter indicated with his gaze that the surrounding crowd worked for him—a veiled threat, implying that Akira had nowhere to run.

"Don't worry," Syberg continued. "All you've gotta do is hand over all your money and everything you've got on you, plus tell us everything you know. We won't kill you or anything."

The men on either side of Syberg trained their guns on Akira. Smiling smugly, they clearly figured that they had him trapped, outnumbered, and outgunned. Only Syberg remained cautious, noting the lack of fear in the boy's expression.

Akira glared at the men. "And you'll kill me if I say no?" he asked. "You won't get any info out of me that way."

"You could fix that," Syberg replied. "Just be a good kid and tell us before you die."

The men had no intention of sparing Akira's life, and he knew it. He sighed deeply and let his head droop. The men sneered and relaxed, assuming he had given up.

Akira faked a look of weakness to the ex-hunters, but inwardly he steeled himself. "All right," he said. "I don't want to die."

As if their job was done, the men took their fingers off their triggers and lowered the muzzles of their guns, hardly realizing they had done so.

Alpha, Akira called.

I'm ready when you are, she replied.

And with that, the men's fate was sealed.

Akira suddenly turned to the right, and the men followed suit, taking their eyes off him. He didn't even check whether his distraction had worked —or bother to aim—before opening fire on them with his AAH assault rifle. The next moment, he was sprinting toward a spot Alpha indicated.

Men shrieked, pierced by Akira's bullets. The gang scrambled to return fire, but they were caught off guard. Surrounding Akira meant that they were facing their own comrades, and they hesitated lest they shoot a friend by mistake.

Some did manage to get shots off at Akira, but they didn't hit him. Alpha had already analyzed the enemies' positions and a number of related factors to compute the routes and locations least likely to suffer gunfire, and she guided Akira straight to them. Her calculations proved accurate: none of those few shots found their mark before he escaped.

Akira dove into a side alley at Alpha's direction. The men blocking it froze in panic at seeing him turn the tables. They were sitting ducks when he shot them at point blank range. The men wore ordinary clothes, which offered no protection against bullets designed to bring down monsters, and every shot passed clean through them. In an instant, the alley was littered with corpses sinking into a pool of blood. Akira ran past without sparing a thought for the grisly spectacle or a glance for the men he had killed.

Angry shouts and screams filled the air behind him. Most of Syberg's men had assumed that threats would be enough to cow a child. Some had come along just to make their numbers more intimidating; a firefight was more than they had bargained for, and they fled for their lives in terror.

Although Syberg and his two lieutenants had suffered a few gunshots, their body armor kept their injuries to a minimum. But the bullets still caused them considerable pain, and their faces contorted in anguish.

"That little punk doesn't know who he's messing with!" Syberg roared, turning his agony to anger. "Go chase him! I'll circle around and cut him off! The rest of you, stop gawking and surround that kid!"

His two lieutenants obeyed at once, but the rest hesitated, afraid to follow. The ex-hunter clicked his tongue in frustration, then pointed his weapon at the reluctant group.

"Get moving!" he snapped.

Syberg waited to make sure the panicked stragglers set off, then clicked his tongue again and entered a different alley in pursuit of Akira.

◆

Akira sped around a bend in the alley and stopped, pointing his rifle in the direction he had just come from. The corner should have blocked his vision, but he could see his approaching enemies clearly—Alpha displayed

their positions on his vision. She had even outlined his pursuers in red to make them easier to identify.

Syberg's men had been rushed into the alley at gunpoint, and they assumed that their quarry was still struggling to escape. They never thought to check if Akira was waiting silently to ambush them, and they raced ahead, throwing caution to the wind.

They came into view—and Akira squeezed the trigger. His hail of gunfire dropped the defenseless front-runners like flies, staining the alley with their flesh and blood. Those just behind them cried out as bullets shredded through them, while others farther back screamed in panic.

Alpha, how many are left? Akira asked.

At least three, she replied. Most of the mob is starting to desert, so it will be over once you kill the leader and his entourage. Hide over there.

Akira took cover against the wall of the alley and waited. Before long, the surviving pursuers unleashed suppressive fire around the corner and then cautiously poked their heads out. They hadn't hit Akira, nor spotted him—Alpha's unerring directions had seen to that, and Akira's years of life in the back alleys had made him adept at evading notice. It would take more than a quick glance to detect him.

One man decided that Akira must have moved on and leaned into full view, only for the boy to instantly shoot him between the eyes.

Two to go, Alpha reported. Reload while you have the chance.

I'm on it.

Akira calmly replaced his magazine, as the shrieks of his enemies echoed in his ears.

◆

Syberg raced to cut off Akira's escape. Rage burned within him at first, but as time passed his head cooled, and he began to look perplexed.

"Guys! How's it going?" he called into his radio.

No response. Underneath his irritation, he began to feel that something didn't add up.

"Shit!"

He had heard gunfire in the distance, but it had fallen silent. So either his men had killed Akira, or the boy had killed them. Syberg hoped for the former. His men might not be replying because the battle had damaged their radios, or because they were busy treating injuries. But what if that wasn't the case? What would it mean for him? Unpleasant images began to flash through his mind.

Who is that kid? Syberg wondered. I thought he was just some nobody.

He had assumed that Akira had simply gotten lucky—a child stumbling onto a dead hunter's cache of relics in the slums or the nearby desert. That would explain everything: where the rumors came from, how a weak kid ended up selling valuable relics to the exchange, and why so many hunters had failed to locate any overlooked areas in the ruin.

Syberg speculated that the kid was an amateur and therefore would've been surprised at his unexpected profit and the resulting rumors. The boy had probably decided to lie low for a while until the gossip died down. And what would his next move be if he hadn't exhausted his cache? To take his initial earnings and buy some gear, hoping to look the part of a hunter. Then he could sell more relics without drawing unwanted attention.

The ex-hunter had ordered his gang to look for a child who fit that description, and when they found Akira, the boy's appearance had seemed to confirm his guesses. Akira had looked weak—far too weak to return alive from ruins and wastelands that gave even Syberg pause. But now the ex-hunter's conviction was in tatters.

In the end, Syberg stopped in his tracks, unable to shake the feeling that death waited for him up ahead.

Should I retreat? he asked himself. If the others have managed to kill the brat, I can always feed them some excuse later.

He hesitated—even though he should have known better. He had precious moments to decide what to do—to fight or to flee—but they ticked away as he stood there.

His time ran out.

A burst of gunfire ripped through the air. Bullets peppered Syberg. His body armor saved his life, but the force knocked his gun from his hands and sent him sprawling. More shots destroyed his fallen weapon. He lay on the ground in pain, unable to respond, completely vulnerable.

Akira stepped out from a nearby alley. Seeing that Syberg was still alive, the boy frowned—he'd shot to kill.

Too many misses, Alpha remarked, smiling but with a touch of exasperation. *You need to aim more carefully.*

Akira sighed. *I'll keep training*, he replied. Then, deliberately, he trained his gun on Syberg's head.

Syberg panicked. He gestured frantically with a hand that could barely move. "W-Wait!" he cried. "You win! I'm sorry! I'll pay you whatever you want—I've got plenty saved up! Just hold off!"

"Why did you go after me?" Akira asked coolly.

"I h-heard that some punk kid was walking around with a fortune! But I was wrong! You're no punk! Please let me go!" Syberg pleaded. "I'll make you the boss of my gang! And you don't want to be attacked any more, right?! I've got clout with other gangs! I can tell 'em to lay off you! Please!"

Akira stared at the man begging for his life, while Alpha in turn watched Akira.

"All right. I don't want to die," Akira said.

Syberg's face brightened, and relief that he would live flooded through him. But then the blood drained from his face as the boy continued, "That's what I said before, right? I should have added: you die instead."

Akira pulled the trigger at point-blank range. His bullet killed Syberg instantly.

Alpha, where are the rest of them? he asked.

They all ran away, she reported. You did it.

Seeing her smile, he knew that he had won. He exhaled, relieved. Then his face darkened and he gave a sigh.

I thought hunters mostly fought monsters, he grumbled, but I feel like I've only killed people since I became one.

Are they so different? Alpha asked cheerfully. Don't they both try to kill you without good cause? If you prefer fighting more monsters, go improve your skills. I don't really recommend taking them on until you do that.

I ain't spoiling to fight monsters. Neither were these guys, right? That's why they attacked me instead. Akira sighed again, deeply. For all they cared, I might as well have been a dropped wallet. It sucks, but I guess that's life until I get stronger.

We'll have to be careful, Alpha replied. There will be more money in that wallet once you sell those relics.

Akira shot a dark look at her, but the smile never left her face.

Robbers didn't target just anyone. They might mug someone without a second thought, but they *would* think twice if they were outgunned. In the slums, at least, you had to be strong enough to protect what was your own. The more money Akira had, the more capable the thieves he would face. They would come, and come, and come, until their corpses piled up high enough to warn others that he wasn't worth the trouble.

Akira and Alpha set off for the exchange once more, taking a long detour around the slums. The bodies they left in their wake would serve as a warning to anyone else foolish enough to follow Syberg's example.

◆

A few days after the attack on Akira, in one of the slum's many alleys, a girl named Sheryl found herself at her wits' end. She had been living well for a resident of that part of town—she had relatively clean clothes, and her hair and skin retained some color and shine. Now, however, the misery that marred her lovely face cast a shadow of gloom over her that a few days of street life could not.

Sheryl had belonged to Syberg's gang, until he died and his organization collapsed overnight. Other gangs had absorbed most of the survivors, but some—those who had taken part in the assault on Akira—had not been so fortunate. Only those who could prove they had gone unnoticed in the crowd—that they hadn't even entered the boy's view, let alone attacked him—met with a warm welcome.

Sheryl couldn't make that claim. She might have been young and a slum dweller, but she stood out thanks to her natural beauty, which promised to grow given time. That potential had earned her Syberg's favor—to put it politely—and so during the assault on Akira she had stood relatively close to the ex-hunter, where it was fairly safe under the circumstances.

Akira had killed Syberg and destroyed his gang, but that might well be just the beginning. No one knew how far a hunter with a grudge would

pursue retribution against slum dwellers, except for the hunter. Some avenged themselves as thoroughly as possible, lest they be seen as weak and invite further attacks. Sheryl had been relatively close to Syberg, both during the attack and within the gang, and no other group would welcome her for fear of retaliation.

"What am I going to do now?" she murmured weakly.

The slums were harsh to children. To survive, Sheryl had developed strong interpersonal skills, fitting in well with social groups. She was sensitive to interpersonal relationships: she could gauge the proper distance to maintain with anyone, insider or outsider alike, and knew the best ways to avoid ruffling their feathers. If she failed in these areas, another gang might attack her, and even her own associates might sacrifice her.

For someone in her shoes, the aftermath of the attack on Akira represented the worst possible scenario.

Moping in the alley would get her nowhere, she knew, but she didn't see any alternatives. Night fell, and she still was no closer to a solution. Impatient and drowsy, she began to have strange ideas, dwelling on possibilities that she would normally never have entertained for long. But in her exhaustion, she desperately clung to her chaotic thoughts until sleep took her unawares.

The next morning, when Sheryl woke in a corner of the alley, her mind felt clear and fully rested. Reviewing the ideas she'd had the day before, she realized that, in her brooding, she had fashioned something resembling an actual plan.

I can't pretend that I'm happy with it, she hedged. It will probably fail, or even get me killed. And even if I pull it off, how long can I really keep myself safe?

Sheryl hesitated. What had seemed a ridiculous hodgepodge of ideas had become a possibility worth gambling on. Her only alternative was staying on her present downward spiral. She would pass her days without any hope, until the day she herself passed.

"I've got no choice," Sheryl told herself. Her mind made up, she rose to her feet with an earnest air about her. Then she set off to stake her future on negotiations with the man who had destroyed her gang.

◆

Akira dropped into Shizuka's store to stock up on ammo. By now, he was well acquainted with the shopkeeper. But his greeting died on his lips when he caught sight of the two other customers she was chatting with. They seemed familiar to him somehow.

Alpha reminded him that he had once rescued them, and he suddenly remembered Elena and Sara.

Now he looked annoyed.

Shizuka was deep in conversation with Elena and Sara, who were her friends as well as customers.

Slender Elena wore a protective suit that flaunted her curves. Loose straps helped secure and stabilize her hefty scanners; they also emphasized the different parts of her figure, making it appear both sensuous and graceful.

Sara wore a highly elastic suit of black armor, which was flexible enough to accommodate the varying quantity of nanomachines that could be stored in her body. Now that she had stocked up again, she had regained her original voluptuous form. Her armor was stretched tight, showing off her sinuous frame and hinting at the allure of the body beneath it. The suit was clearly too small to fit her full bust, and she had given up trying to force it in; instead, she'd left the front zipper pulled low, exposing her cleavage. A rifle cartridge, repurposed as a pendant, hung from her necklace, its tip half buried between her breasts.

"I know, I know!" Shizuka was saying to Sara. She sounded a little fed-up, not her usual professional and friendly self. "I know that this mystery person saved you. And that they let you take all the spoils. And that these sold for more than you expected—enough to pay for your nanomachines with plenty left over. I know because *this is the fifth time you've told me*."

"Is it?" Sara asked, not to be deterred. "Then have I told you about the medicine he gave us? I stocked up on enough nanomachines to keep me going for a while—longer than usual—but oddly enough they've been more efficient since I took that medicine. Elena says there's a good chance that it was Old World tech, not modern stuff. So I'm stuck with these gigantic boobs, and men won't stop staring."

Sara droned on and on, with no end in sight. Shizuka liked gossip as much as the next person, but she preferred new stories, not old ones repeated ad nauseam—especially when they were basically gushing about a crush. Casting about for an excuse to escape, Shizuka noticed Akira walking in.

"Oh, I've got a customer," she said, interrupting Sara. "You'll have to tell me some other time. What can I do for you, Akira?"

Akira walked up to the counter and bowed. "Hello, Shizuka," he said. "I'd like to buy some more ammo, please."

"The usual?"

"Yeah. And sorry I never buy anything else. I promise I'll pick up a new gun before too long."

"Don't sweat it. Profits on consumables add up. I'd rather you focus on coming home alive than take risks trying to make it big."

Shizuka turned to Elena and Sara. "This is Akira," she said. "He's a hunter, like you two. You've been in the business longer, so how about giving him some tips?"

“Nice to meet you,” Akira replied, bowing to them and pretending that this was their first meeting—which, in a sense, it was. “I’m Akira, and I hunt relics, for what it’s worth.”

Elena and Sara smiled at him. They had known Shizuka for a long time and trusted her both as a friend and as a businesswoman—a trust that extended to anyone she introduced them to.

Elena introduced herself and her partner. “We’re hunters too, and we shop here all the time. So I guess we have more experience in both ways. I’d like to tell you that we’re highly competent veterans, but...” She let her words trail off with a wry grin.

“We slipped up and nearly got ourselves killed just the other day,” Sara explained, with the same expression. “We only survived because we got lucky. So be careful—no matter how cautious you are, you can still wind up dead. That’s just how it is in our line of work.”

Their smiles betrayed complex feelings on their narrow escape. They had been in serious danger, but they had also come out ahead, so they could look back on the event with some fondness.

“I understand,” Akira said with a nod. “I’ll be careful.”

Elena nodded back, satisfied, then turned to Shizuka. “You’ve got a customer, so I think we’d better get going.” She added playfully, “Besides, I couldn’t bear to let Sara bore you forever.”

“You try listening to her rattle on, then,” Shizuka replied, complaining good-naturedly. “I try to treat my regulars right, but that only goes so far.”

“I listen to her all the time,” Elena shot back. “But I doubt she gets much fun out of telling it to someone who was there, and we spend a lot here, so it won’t kill you to take over for me now and then.”

“Oh yeah?” Sara asked, joining in the banter. “In that case, I’ll tell you the whole story once we get back.”

“All right,” Elena responded, her smile turning nasty. “Let’s have a nice, long chat to make sure you never pull another stunt like that.”

Sara laughed dismissively. “See you around, Shizuka,” she said and headed out the door without her partner.

“So that’s how it is.” Shizuka grinned. “No wonder she wants me to listen to her.”

“I only do that when she really drones on,” Elena replied. “Bye now.”

“Bye. Come back to shop sometime.” Shizuka waved at them, then turned her full attention to Akira. “Thanks for waiting. You’re here for ammo, right? I’ll have it ready for you in just a sec.”

She fetched the proper ammunition from the back room and handed it to Akira. As he stashed it in his backpack, he noticed that she was watching him intently.

“Is, um, something up?” he asked slowly.

Shizuka didn’t answer immediately. She continued to scrutinize Akira as if trying to figure something out. When she did speak, it came as a shock.

“So, Akira, why didn’t you tell Elena and Sara that you rescued them?”

Akira almost choked. “I’m, uh, not sure what you mean,” he said, doing his best to play it cool.

“You’re not exactly rolling in dough yourself,” Shizuka went on, “and they told me that the gear from those bandits you killed fetched a hefty price. You did the fighting, so I’d say you deserve a cut.”

“No, I mean—”

“I’m sure you have your reasons, but if worrying about who to trust is one of them, I guarantee that you can trust those two.”

“But you see—”

“Hunting is a dangerous business, so finding other hunters you can count on really matters,” Shizuka cautioned with a kind smile. “I think this could be a great opportunity for you.”

Akira fell silent, looking agitated. Shizuka sounded certain that he was the one who had helped Elena and Sara, but she had no proof. She couldn’t have any. He could fool her as long as he kept his mouth shut.

“Elena tells me you tossed her a rifle cartridge,” Shizuka added. “Every cartridge I sell has a serial number on the casing, so that I can track its sales history and contact the manufacturer about any defects. I know I sold that one to you.”

Faced with evidence, Akira caved in. “Sorry,” he said, “but would you keep it a secret?”

“Ah, so I was right,” Shizuka replied. “I wasn’t sure, so I decided to rattle you. Sorry about that.”

“B-But what about the cartridge?!” he spluttered, unable to contain himself.

“The casings really do have serial numbers, but that’s still not definite proof.” Shizuka laughed. Then she gave the startled boy an apologetic look. “I’m sorry, Akira. I’m sure you have good reasons for keeping quiet about this. I promise not to tell anyone.”

A lecturing note entered Shizuka’s voice as she continued. “Still, I meant what I said about how important it is to know other hunters you can trust. Some folks are happy to add a side job of robbery to their relic hunting, so banding together with trustworthy people will help ensure you return home alive. From where I stand, you, Elena, Sara, and all of you hunters look like you’re rushing toward an early grave.” For a moment, a lonesome smile crossed her face. “I don’t want to tell you how to live, but I do at least want to give my friends advice that will help them survive. I know I’m repeating myself, but I promise you that Elena and Sara are trustworthy. If you ever change your mind and want me to put you in touch with them, just say the word.”

“I understand. And thank you for worrying about me,” Akira replied with a polite bow, grateful for her selfless concern.

At that, Shizuka’s usual smile returned.

“Hang on,” said Akira, struck by a sudden doubt. “If the casing didn’t prove it, how did you know?”

“Just a hunch,” she answered. “I had nothing definite to go on, but I guessed it from the rifle cartridge. You saw Sara’s pendant? She had it made out of the cartridge that their rescuer gave Elena. It doubles as a good luck charm and a warning to herself, or so she says. I had a feeling that it came from my store.” She didn’t mention that she remembered the cartridge clearly because Sara had shown it to her so many times.

“Besides,” she added, “you looked to me like you were only pretending to meet them for the first time when I introduced you. They were just telling me how much some unknown person had done for them, and there you were, trying to act like a stranger. I just suspected a connection.”

Akira cradled his head in his hands, shocked at how easily she had seen right through him.

“Oh, and just so you know,” Shizuka added, sounding a little uncomfortable, “if you do tell them, I think you’d better do it soon, because, well…” She hesitated again, and her smile grew uncomfortable as she went on, “They really must’ve been thrilled about that rescue. They won’t stop telling me about it, and they’ve been looking kind of…lovestruck when they do.”

Akira listened in silence. He noticed that Shizuka was growing uneasy as the conversation took an unexpected turn.

“Their story’s been subtly changing in the telling,” she continued. “They started calling their mystery person ‘he,’ and the way things are going, they’ll keep filling in details until—” Shizuka broke off with an uneasy smile. “I’m just speculating, mind you, so don’t worry too much. But they’ll end up telling themselves that some wealthy tycoon’s son went hunting for fun and happened to save them, that he kept his identity a secret because he didn’t want gold diggers going after him, and that he didn’t care about a reward or expensive meds because he has all the money he’ll ever need. Once they convince themselves of that—” Shizuka broke off once more. “Forget it. I’m overthinking things.”

Hearing himself described this way, Akira broke out in a cold sweat. It sounded plausible, yet he in no way resembled such a fantasy.

“I’m nothing like that,” he said. “Just a broke kid from the slums.” After a pause, he added, “Definitely don’t tell them, then. Please.”

Akira and Shizuka exchanged bemused grins and then dropped the subject.

Chapter 11: Akira and Sheryl

Akira, you're being followed again, Alpha remarked, as casually as though she were merely changing the subject. She and Akira had been chatting on their way back from Shizuka's store.

Again? he replied, openly annoyed. It had only been a few days since Syberg's attack, after all. But then he grew perplexed. *Wait, they're not planning to go after me* here, *are they?*

Public safety in the city varied wildly depending on who was responsible for a given area. Private security firms oversaw the districts within the walls, of course, and most zones outside them as well. They cracked down on any sign of civil disorder with brute force.

Akira was on the way to his hotel, which stood close to the slums, but he was still passing through relatively well-policed neighborhoods. Disturbing the peace here would make enemies of those who profited from upholding it. Safety was a treasure in the East, and anyone who threatened it could count on swift reprisals.

Akira was a "shoot-first-ask-later" kind of guy, especially in light of recent events, but even he doubted that anyone would be stupid enough to rob him here. There was a time and place to start a fight, and—unlike walking through the slums—this wasn't one of them. Normally, getting assaulted here would be unthinkable.

Alpha picked up on his uncertainty. Don't worry, it doesn't look like she's going to attack you—she's not even armed. I'd say she's not so much tailing you as trying to work up the nerve to talk to you. See for yourself.

Akira looked behind him. He quickly spotted the person tailing him because Alpha highlighted her in his vision. The girl, roughly his own age, was acting as though she had something to hide, and her behavior only became more suspicious when she realized that he had turned to look straight at her.

That girl was Sheryl.

Akira relaxed: she didn't really look like a threat. He didn't feel right about ignoring her or running away, so instead he approached her. Sheryl, for her part, became a bundle of nerves as Akira advanced on her.

Calm down! she told herself, struggling not to flee. Look on the bright side: he's saving me the trouble of striking up a conversation! It's too late to back down!

Syberg and his lieutenants had failed as hunters, but they had still run a tight ship in their small gang. Now the person who had easily taken them down—who hadn't hesitated to pick a fight even in a ring of his enemies—was coming near her. If he recognized her, he might easily kill her on sight—effectively ending negotiations. He didn't seem like the type who would hesitate once he decided to take her life. She clenched her hands tight, fighting against the terror.

Sheryl's first gamble had been that Akira either hadn't noticed her at the ambush or wouldn't remember her. And now he was standing right beside her. She tried to smile, but her mouth twisted in fear.

"Do you need something?" he asked.

Now Sheryl could see his gear up close, including the AAH assault rifle that had massacred her gang. It was a cheap weapon, but it still boasted the power to drop monsters in their tracks, far superior to the handguns and other weapons designed to fight humans. A burst from that gun might not even leave her corpse recognizable, she thought, remembering the firefight in spite of herself. In her imagination, she added her own body to the pile of corpses. None of this helped her nerves at all.

"I w-want to t-talk," she stammered.

"Talk?" Akira replied. "What about?"

He waited, his question written on his face, but Sheryl was too shaken to continue. Even so, she forced her ragged breathing to calm down and tried to continue, desperate to avoid offending him.

By the way, Akira, Alpha interjected, she was in the crowd the other day. She was one of those who tried to rob you. Though she did run away as soon as the shooting started.

She was? Akira asked. What could she possibly have to say to me now?

Don't ask me, Alpha replied.

Akira had relaxed his guard when he saw Sheryl trembling, but now he was on the alert once more. Hostility crept into his face and voice as he asked,

"What does someone who tried to kill me have to talk about?"

Sheryl's mind went blank. Her brain refused to process what was happening. Her vision swam, and she shook so violently from head to toe that it was a wonder she didn't collapse on the spot. Fear swept over her, filling her head with visions of what Akira would do next. She imagined him drawing his gun, pressing its muzzle to her throat, and pulling the trigger, bathing the street in the blasted fragments of her head, and her shaking grew even worse. She heaved from fear and stress, but she had nothing to vomit but gastric acid—her stomach was empty. Besides which, she hardly had time to gag before she suffered a complete meltdown.

Akira was stunned. Sheryl was terrified—with tears leaking from her eyes, snot dribbling from her nose, and the look of a prisoner on the chopping block—and obviously in no condition to speak. In the face of her collapse, his fury gave way to confusion.

Oh dear, what a mess, Alpha remarked, mocking Akira's dismay.

I-Is this my fault? he stammered.

Who knows? she replied. I understand what's going on, and I don't care what happens to someone who had a hand in trying to kill you. But don't ask me how this will look to anyone else.

It was true, Akira realized with a start. Any observer would have thought that Akira was threatening Sheryl. Some well-meaning ignoramus might easily take it upon themselves to come to her aid. If the area's police force got the wrong idea, he would be in for a world of trouble. He anxiously tried to bring Sheryl to her senses.

"Listen, um, just calm down, okay?" he said. "I'm not gonna do anything to you. You're not looking for a fight either, right? So let's just take it easy and talk this out. You wanted to tell me something, remember? Come on, breathe. Try to relax."

It was useless. Sheryl kept sobbing noiselessly.

Why did this have to happen to me? Akira silently cursed the world.

Somehow or other, Akira made it back to his hotel with Sheryl in tow. He didn't want to abandon her or shake her off his trail, as whatever she had to tell him must be important if she had tried to approach him despite her terror. She had not resisted when he had led her by the hand, and while she was still quite shaken, by the time they reached his room she had regained a little of her composure. Her tears had also stopped, although their traces glistened on her cheeks.

Looking at Sheryl, Akira couldn't think of her as an enemy. He wouldn't have helped her otherwise; he would have shot her dead at the drop of a hat, even if she sobbed and pleaded with her face twisted in fear. But how to deal with a quaking girl who was not his enemy and was visibly terrified —of him—was beyond him.

"Wh-Why don't you try taking a bath, for starters?" he stammered, praying that the suggestion would help. "I bet it'd help you calm down."

Sheryl nodded almost imperceptibly and headed toward the bathroom of his latest lodgings. At any other time, she might have suspected Akira's motives for making such a proposal, but at present she was too overwhelmed to think of such things. Then, too, she would have lacked the will to resist even if she had thought of it.

Once she vanished into the bathing area, Akira heaved a deep sigh, exhausted.

What do you think that was about, Alpha? he asked.

I can speculate as to a number of possibilities, but it would be faster just to ask her, Alpha replied. Anyway, I'd say training is canceled for today, so we'll have plenty of time to hear her out once she's done in the bath.

I guess you're right.

Akira settled down to wait for Sheryl, trying to calm himself in the meantime.

◆

Sheryl lounged absentmindedly in the bathtub. She had lost her first bet and had assumed she was done for, but now she felt a bit calmer. Her fear, anxiety, and panic melted away with her fatigue as she soaked in the hot water. She hadn't bathed in a long time, and having a bath now went a long way toward putting her in a healthier state of mind.

I stumbled out of the gate, but I'm still alive, she thought. Good luck or bad, I'll try to look on the bright side: because I fell apart like that, he probably won't kill me on the spot. And I guess I'm not too surprised he brought me back to his room. I'm not exactly thrilled, but I'll try my best and hope it does some good.

She had thought she was prepared to approach Akira, but clearly had not been up to the task, as her meltdown amply demonstrated. But now that she could think again, she appreciated how her collapse had lowered Akira's guard and saved her life. Pure luck, that. If she'd tried to fake that kind of display, her performance could have backfired disastrously.

As soon as she was out of the bath, she would have to make her pitch to Akira. Whether he would accept was another matter, but she would do everything in her power to make that happen.

Sheryl looked at her reflection in the bathwater. She saw a girl whose looks brought her the favor of men. Her bust was somewhat on the meager side, but she knew she was pretty. Her body could be a valuable chip to add to her wager. Not that Akira had seemed interested in her in that way, as far as she could tell when he recommended the bath—but he could easily change his mind.

Offering her body wasn't her first preference, but she couldn't really refuse him if that was what he demanded—she had little else to offer but the clothes on her back. So just in case, she decided to make herself look as appealing as possible, carefully scrubbing her skin and hair. Her body made a very valuable bargaining chip, indeed.

◆

While he waited for Sheryl, Akira defrosted some frozen food from the fridge and sat down to eat. But just as he was about to dig in, Sheryl returned from her bath. As soon as she saw the food, her stomach growled, announcing her hunger more overtly than she would have preferred.

Their eyes met. After a few moments Akira pushed his food toward Sheryl and began to defrost a new meal for himself. Sheryl waited in silence, her food untouched.

Once Akira's meal was ready, he sat down across from Sheryl and looked her over. To his relief, she seemed calm enough to talk now.

"Okay," he said, "let's talk while we—" Another growl from Sheryl's stomach interrupted him. After an uncomfortable silence, he corrected himself. "Let's talk *after* we eat."

They fell to at once. When their hunger was finally satisfied, Akira tried again.

“Well, for starters, I’m Akira,” he said.

“My name is Sheryl,” the girl replied with a respectful bow. “Thank you for the bath and the meal, Mr. Akira. And I’m so sorry for losing control of myself and causing trouble for you.”

“Just ‘Akira’ is fine.” For better or worse, he didn’t seem particularly concerned. “So, what did you want to tell me?” he asked, a bit more serious.

“I’ll get straight to the point,” she said, steeling herself. “I want you to become our boss.”

Akira hadn’t expected that. He couldn’t help a look of suspicion, which only added to Sheryl’s nervousness as she tried to explain further.

In the harsh world of the slums, many people formed gangs to survive. Together, they could secure safe places to sleep, a regular food supply, and better funds—benefits that generally outweighed the difficulties of working as a group. Even a grunt found the utilitarian life in a gang better than living alone.

Numbers were power, even in the slums. By offering protection and other benefits, a well-run gang would attract more recruits. The upper echelons of gangs with enough followers to control an area could lead quite pleasant lives. And that easy living would draw even more people to the gang, until it became a major powerhouse.

Not that the leaders of these mega-gangs necessarily lived in the slums. Many had their hands in under-the-table dealings that were unwelcome in better-regulated districts. So they set up operations in the slums and provided funds and arms to grow the gangs that would carry out their will.

Active and former hunters frequently turned up as gang leaders as well. The power to hunt monsters in the wastelands also worked in the slums. The mere knowledge that someone in a gang had hunting experience helped to keep its members safe. Hunters also had connections at the exchanges and other businesses, which reduced the risk of slum dwellers being taken advantage of when they sold scrap metal and other junk there. So hunters usually rose to high positions within the gangs, in spite of any personal issues they might have.

More than a few hunters joined the gangs of the slums, for a variety of reasons. Some gave up on braving the desert wastes and hoped to make their fortunes in the world of illicit business. Others wanted a source of expendable recruits to aid their rise in the wastelands. Still others sought safehouses and places to store their finds, a foothold for building a major organization of their own, and more.

Sheryl explained all of this to Akira, adding that he was now perfectly placed to take over Syberg’s position. The ex-hunter and his men had held his gang together by strength—in other words, violence—rather than leadership, so Akira, who had killed them easily, would have no trouble finding acceptance as its new boss. He could even claim that he had seized

Syberg's gang as payback for the attempt to rob him. The benefits would be great and the risks nonexistent, Sheryl eagerly informed him.

Akira, however, was unenthusiastic. "Not interested," he said. "It seems like a pain. Sorry, but find someone else."

"W-Wait!" Sheryl cried, panicked as Akira tried to end the conversation. But she was at a loss for what to say next—he was obviously unimpressed by her explanation, and she couldn't think of anything better to entice him with. She didn't want to irritate him by drawing out a discussion he found boring—especially now that he knew she had been in league with his attackers. He had spared her life for the moment because he couldn't be bothered to kill her, but he might easily change his mind if she seriously upset him.

Anxious to improve his mood, Sheryl made the offer that she had hoped to avoid. "If you agree," she said reluctantly, "you can do whatever you want with me. Right now, if you like."

Akira's gaze roamed over Sheryl's chest and limbs, as though he was appraising her body. She honestly found it quite unpleasant, but she had come prepared for death, so this was acceptable. If anything, she told herself, she was grateful that her looks held his interest.

At last, Akira looked her in the eye again. "I appreciate the offer," he replied, still evidently unenthusiastic, "but you don't look that tough. I hate to break it to you, but you'd just get in my way, even as a meat shield. I appreciate your willingness to put your life on the line for me, but that's not as valuable an offer as you think it is."

A moment of confusion passed for Sheryl. Then she was speechless. Akira didn't value her body for her allure—he had been estimating her physical strength and combat experience. And he had concluded that she was useless. She was stunned.

Alpha had been observing the pair.

I don't think that's what Sheryl meant, Akira, she interjected with a smirk.

What did she mean, then? he asked.

I'm guessing she was talking about something more...sexual.

Akira shrugged. *In that case, I'm even less interested.* Akira finally got it, but it didn't change his mind.

Are you sure? Alpha asked with a look of surprise. She's pretty hot, and I bet she'll get hotter. Not as hot as me, of course. Not as hot as me, of course. Not as hot as me, of course.

I got your point the second time; the third was overkill. And a nudist who keeps coming up with excuses to strip is plenty for me.

Alpha flashed a triumphant grin. So, all my hard work proofing you against honey traps has paid off!

Yeah, I guess, Akira responded, already feeling like he'd said too much. Besides, taking advantage of her wouldn't sit right with me.

Alpha teased, It looks like a good deal for both of you to me. You're quite a romantic for a child, Akira—or maybe because you're a child. She saw he was annoyed and resumed her usual smile. In any case, why not help Sheryl —whether you bed her or not?

What for?

Didn't you tell me that good deeds bring good luck? People and monsters keep attacking you, both in the ruins and in the city, and now you're in this mess. You really must have used up all your luck to meet me.

Akira looked doubtful. He vaguely remembered saying that to persuade a reluctant Alpha to rescue Elena and Sara—or rather, to massacre their attackers. Did she still hold that against him? He frowned, suspecting that she was giving him a roundabout reminder to never try anything like that again.

So help out a sweet, beautiful girl who has the misfortune to live in the slums, she continued, laughing. Isn't this a perfect opportunity to bring back your luck with some good conduct?

Akira knew he wasn't lucky, and he hesitated. But he still wasn't convinced to help Sheryl.

Come on, that's not a good enough reason for me to take care of her, he argued. It's not just giving her a handout—it'll be a lot of work. I thought you didn't want me worrying about others.

I only objected back then because your life was in danger, she replied offhandedly. Of course you shouldn't put your life on the line for Sheryl, or solve all her problems, or care for her the rest of your life. Just give her a helping hand and a bit of good luck. That's all.

Akira wavered.

Look, if she blows her big chance, that's her problem, Alpha continued. You won't need to feel guilty. And if she makes it big instead, you might be able to cash in on her gratitude. Just cut ties with her if she holds you back. It's that simple.

Alpha had smoothly introduced a concern Akira hadn't even thought of, then quickly resolved it. Though it was barely reflected in his face, he suddenly felt as if an impossible responsibility had become trivial. The cost of helping Sheryl dwindled in his mind, for better and for worse. And he began to hope—somewhere between a wish and a prayer—that he might get some good luck after all.

"Luck, huh?" he muttered with feeling. Good or bad, luck was important to him.

To an outside observer, Akira would have looked like a weirdo changing his expressions without saying a word. Sheryl, however, had too much on her mind to wonder. If her body was useless as a bargaining chip, she couldn't think of anything else to tempt him with. Tearful entreaties probably wouldn't get her anywhere, so she felt at her wits' end. She was

starting to wonder if she should get down on her knees and beg when she overheard Akira muttering to himself.

Luck? She turned the word over in her mind, trying to see if she could make use of it, but it meant nothing to her. Caught between panic and confusion, she saw Akira reach into one of his pockets and fish out a hundred-aurum coin—one of the original three he had earned as a hunter.

Akira flicked the coin with his finger. Sheryl instinctively followed it with her eyes as it rose into the air, spinning as it flew, and then fell. Akira caught it between his hands.

"Heads or tails?" he asked.

She looked at him in surprise. He returned her gaze in silence. Would he agree to her request if she guessed correctly? It wasn't fair that blind chance would decide her fate, yet she felt hope that he might recant his initial refusal. She pondered what to choose, but it wasn't a question she could think her way through.

"Heads," she decided at last, praying that she had chosen correctly.

Akira checked the coin, keeping it hidden from Sheryl's sight. She stiffened again as he closed his hand around the coin and returned it to his pocket.

"I'll work with you," he said, "but on one condition. I won't run the gang; you will. I'll lend you a hand and let you handle the rest. You can appoint someone else to be the boss if you want, but that doesn't mean I'm gonna start helping them—this arrangement is just between us. That work for you?"

Sheryl couldn't refuse. "I understand," she said with an enthusiastic bow. "It would be my pleasure. Thank you so much."

She had gotten Akira's backing, but she'd also gotten a gang to run as well. Was this really a good idea? Akira had neither shown her the coin nor told her if she had guessed correctly.

"M-May I ask something?" she ventured timidly.

"Go ahead," Akira said, "but if I tell you a question is off-limits, never ask it again." He realized now that she had seen him shooting looks at empty space, and he didn't want her bothering him with doubts about his sanity or whether he used drugs.

"O-Okay," Sheryl replied, nodding. For her part, she didn't want to offend him by prying into his personal business.

"So, what do you want to know?" he asked.

"Well," she hesitated. "It *was* heads, wasn't it?"

"Don't ask," came his immediate response.

"All right," Sheryl slowly replied, but the question troubled her. Had she won her bet, or had she lost? She didn't know.

Akira knew what side his coin had landed on, but he didn't know the outcome of the wager any more than she did—that was for the future to reveal.

◆

Alpha’s words were never more than window dressing. She didn’t believe for an instant that good deeds brought good luck. That was merely a pretext—and not for Sheryl’s benefit. Alpha simply hoped that watching Akira and Sheryl together would shed light on the mysterious principles that motivated him. She knew that he could kill without hesitation, but how far would he go to help an associate of his attackers—someone he could easily abandon to her fate instead? Alpha might learn quite a lot from observing him here.

She acted for her own ends, nothing more.

Chapter 12: Sheryl’s Gang

When Akira and Sheryl had concluded their discussion, they stepped outside. There was nothing remarkable about a well-armed boy walking with a girl dressed better than the average slum dweller: just a typical rookie hunter and his hanger-on. Yet they managed to attract occasional stares nonetheless.

Sheryl took Akira on a tour of the slums, starting with Syberg’s turf and expanding outward. The various gangs had divided the sprawling slums into areas of all shapes and sizes, each one with its own rules. Those who didn’t abide by the local customs, through ignorance or otherwise, roamed the streets at their peril.

Even the back alley where Akira had made his bed was part of some gang’s turf. He had survived, he knew, only because nobody cared to chase off the squatters in such an out-of-the-way spot. And he also knew to avoid other neighborhoods if he wasn’t familiar with their rules. So although he’d grown up in the slums, he was far from acquainted with most of them.

“I’ve never been here before,” he remarked, surveying an unfamiliar part of town with some interest. “It looks awfully neat and tidy for the slums.”

Robust buildings lined the streets around him. Merchant booths kept up a steady stream of business as they marketed their wares: patched-up handguns, chipped knives, cheap jewelry, and a wide array of other questionable products. A neighborhood so secure and stable was a testament to the power of the local gang.

Sheryl smiled. “I hear the city built this area up in preparation for a planned expansion of the lower district. But the project hit a setback, so the local boss took it over.”

“Yeah?” Akira was a little impressed by Sheryl’s store of slum trivia—he could never have come by such knowledge while camping out in the alleyways.

Did you know that too? he asked Alpha, out of idle curiosity.

No, I didn’t, she replied.

Really? Akira looked surprised—he had vaguely assumed that there were no gaps in Alpha’s knowledge. *I guess not even you know everything.*

But Alpha quickly put him in his place. Of course I don’t, she said. However, development in this area stalled because it was always planned to. The city never really wanted to build this place up, but someone funded an initiative anyway because it was easier to get the area developed to their liking under the auspices of a municipal project.

So you do know all about it, Akira replied reproachfully.

I didn’t know the publicized version. It sounds to me like the mastermind wanted to cover their tracks, so they spread this story that the gang took

over illegally. That'll help them avoid liability if someone gets wind of what they're up to.

Akira did wonder how Alpha had come by an account that someone had tried hard to conceal, but he decided that there was no point in asking her. Alpha was an anomaly—and not only because virtually no one else could see or hear her—but he tried not to dwell on her many secrets. She was on his side, and that mattered more than her enigmas.

After all, he had always believed that no one would extend a helping hand to a scruffy street kid like him—and he believed it still. Alpha was the exception that proved the rule. So he turned a blind eye to her oddities. Better that than to pry into her secrets and risk losing her—at least for the present.

Suddenly, Alpha was all mischief. You know, she grinned, you and Sheryl are pretty much on a date, walking side-by-side like this.

Akira nearly spluttered and spun toward Alpha without thinking. Sheryl pretended not to notice; Akira had already told her not to ask, and she was perfectly willing to turn a blind eye to his oddities. Better that than to risk losing a stable lifestyle.

A date? You can't be serious, Akira snapped.

It's a date, it's a date! It's a fact you can't debate! Alpha was thoroughly enjoying Akira's confusion, and the boy found himself at a loss. *Go on, buy her a present!*

Fine. I'll get her something if it means that much to you, he muttered. He didn't really see the point of the gift, but there wasn't any risk to himself, and he wanted to keep Alpha happy—and to avoid a long-winded lecture on why she thought he should give Sheryl a present.

Akira approached one of the nearby booths, and Sheryl stuck close to him. A variety of wares lay scattered on the front counter, and his eye rested on a gun that had seen better days. Even a third-rate weapon like that could be helpful against the dangers of the slums.

Nope, bad idea, he decided, shaking his head a bit. A dodgy gun that might backfire was more of a nuisance than a help. Besides, he'd never given a present before, but people didn't really give guns on dates, did they? He looked around for a safer choice, though he wasn't sure where to start.

Alpha, what should I get her? he asked when no clear options presented themselves.

Decide for yourself, she replied with a laugh.

Didn't you promise to answer my questions? he countered. Even speaking telepathically, he was clearly annoyed.

Yes, and I kept my word. Give her something you picked out yourself. That's the answer.

Is that really important here?

Absolutely. In the worst case, you'll give her something weird, she'll pull a face at you, and you'll learn something. Good luck, she said cheerfully.

With a telepathic sigh, Akira gave up and returned to examining the merchandise.

"What are you looking for?" Sheryl asked, just trying to make small talk.

Akira frowned and hesitated. "Do you want anything here?"

"What?"

"Oh, well, like you said yesterday, I'm your backer—I mean, acquaintance—I mean… What was it, again?"

"You mean *associate*?"

"Yeah, that. A gift will help prove that we're close associates, right? I'll give you a present to use for that—although I don't know how much good it'll do you." Akira took the opportunity to sidestep Alpha's instructions. He might have been ignorant when it came to dating, but even he would rather avoid giving Sheryl something that would earn him a funny look.

◆

Sheryl was shocked. Never in a million years had she expected Akira to show that kind of consideration. And in fact, she was right: on his own, he wouldn't have. She had no way of guessing that he was following Alpha's prompting, so she was all the more surprised.

"So, what do you want?" Akira asked again, snapping Sheryl back to reality.

She pasted on a smile that seemed more delighted than she actually felt before replying. "Um, would you pick something out for me, Akira? The present will mean more that way." Sheryl adopted a sentimental tone and posture that implied she cared more about Akira's thoughtfulness than his actual gift.

If she could have had her way, she would have chosen the most expensive gift he could find. The more costly the present, the stronger the proof it provided that he was on her side—and the more cash it could be sold for later if need be. But begging for pricey trinkets now would only ruffle his feathers, and street stalls didn't deal in luxuries, so she had decided on a different avenue of attack. She hoped that her act would make him feel more affectionate toward her. But such subtlety was wasted on him. A tender look from the beautiful girl not only failed to brighten his face, it actually made him look even more worried.

"If you say so. But don't whine if you don't like it," he said. "This is your last chance to choose for yourself."

Again Sheryl was surprised, though she hid her feelings. Nothing about his last, stubborn attempt to get her input resembled the kind of favorable reactions she was used to. Yet she perceived clearly that he didn't trust his own taste, so she hid her confusion and played along.

After pretending to pause for thought, she smiled and replied, "I would never complain about a present from you, but since you ask, how about some kind of jewelry? I think that would give the right impression."

"Okay, sure," Akira said, unmistakably relieved. His face showed more confidence, now that he had a smaller selection of possible gifts to choose

from. If not for Sheryl's suggestion, he might very well have settled on a gun after all.

After some browsing and hesitating, he eventually bought Sheryl a somewhat expensive-looking pendant on the grounds that it was a piece of jewelry and would probably fetch a decent price at the exchange.

"Thank you so much," she said. "I'll treasure it."

Sheryl's best smile of gratitude made little impact on Akira, who felt exhausted by the whole ordeal. "Sure thing," he replied. "Do what you like."

They wandered through the slums until sunset. Sheryl bowed deeply to Akira as they parted. "Thank you so much for today. I'm sure we'll make a great team."

"Great. Watch out on your way home," he responded.

"I will. You take care too." Sheryl left Akira with a smile that hinted she would rather stay. She contented herself with his token of friendship, although she privately regretted failing to win his affection. Once her back was turned to him, her look turned grave as she considered her next moves.

Akira silently watched Sheryl go for some time. Even after she was out of sight, he made no move to leave.

Don't you want to head back? Alpha asked, puzzled.

Hmm? No, not right now, he said. It's the first day, and I've got nothing better to do, so, well, let's play it safe.

With that, he began walking in the opposite direction from his hotel.

◆

The dissolution of Syberg's gang meant that its turf was now unclaimed territory. None of the neighboring gangs would leap to mount a violent takeover—the resulting turf war would only lead to losses that might have been avoidable. First, they would attempt to talk it out and divvy up the territory to their mutual satisfaction. Bloodshed could wait until negotiations failed.

Syberg's former stronghold stood in the center of that no-man's-land. Apart from a few worthless odds and ends, all of the wealth and goods the ex-hunter had hoarded had been carried off by the survivors as gifts to ease their passage into other gangs. The building itself, however, remained a valuable prize for any slum dweller who successfully occupied it.

For the moment, though, it stood silent and deserted. If any of the nearby gangs tried to move in, the others would take umbrage and respond with violence. Even hapless squatters, unaffiliated with any gang, might set them off.

Sheryl stood in the newly deserted structure, waiting for no one in particular. She hadn't put out a call and had no guarantee that anyone would show up, but she reckoned that someone probably would. She didn't have long to wait before her prediction proved correct.

"Welcome to my base," she said, masking her nerves with a fearless smile.

In stalked a number of survivors from Syberg's gang. Not all of its members had managed to join other gangs, and those who had didn't always find it smooth sailing afterward. Some had difficulty fitting into a new group, while others found themselves poorly treated or even kicked out once they had handed over their gifts. So, when they had spotted Sheryl walking with Akira, they naturally came to investigate.

"Whaddaya mean *your* base?" one man asked, eyeing her with menace and suspicion. "And what were you doing with that kid? Ain't he the one who offed Syberg?"

Sheryl maintained her confident smile. "I mean that this base is mine," she responded. "As of today, my gang runs this place. Akira and I have come to an understanding—namely, that I'm the boss now."

"Akira? That runt?!"

"That's the one. Doesn't he have a lovely name? Now, what brings you here? Did you forget something when you ran away?" Sheryl asked, openly belittling them. She knew that acting full of herself would invite backlash, but she did it anyway. She wanted everyone to know that she had the backing to get away with it.

As expected, the men grew more cautious—and more hostile. "We saw you with the kid and came to ask you what was up," one of them said. "What do you mean you 'came to an understanding'?"

"Do I need to spell *everything* out for you?" Sheryl asked. "Like I said, I'm in charge. I talked Akira into helping out my gang, but he's too busy hunting to bother with the small stuff. Think of me as his stand-in." Her smile took on a haughty edge as she continued, "Akira still has a reputation to uphold. So I'm the boss, and I give the orders. Get it?"

"That little punk killed Syberg!" one of the men shouted. "We wouldn't even be in this mess otherwise!"

"Syberg?! Who cares about that loser?" Sheryl asked, her voice full of scorn. "Even with a whole crowd to back him up, he couldn't kill one kid—and the *kid* killed *him*. How stupid can you get?"

"Watch it, Sheryl," the irate man threatened. "It doesn't matter how tough that kid is—he's not here to protect you."

"Excuse me? Was that supposed to be funny?" Sheryl sounded like she was losing patience, going past mockery into pure disgust. The men began nervously scanning the room for any sign of Akira.

"You won't find him," Sheryl told them. "He's not here. Like I said, hunting keeps him busy."

"You little bitch," a man growled and advanced on her—until her words stopped him in his tracks.

"Do you honestly believe I haven't told Akira about you losers? Or that he won't come hunt you down if anything happens to me? I figured you would show up here, you know."

"Why would he go that far for you? Get yourself killed, and I bet he'd just laugh." The man was half-convinced that Sheryl was bluffing, and half-

hoping that his threats would get her to show her hand, but her smile remained confident and unperturbed.

"Why wouldn't he? I'm his favorite. See what he gave me?" she said, jangling her pendant ostentatiously. "You must be crazy if you think he would laugh off my murder."

She didn't look like she was bluffing. The men still had their doubts, but no one wanted to risk Akira's wrath. The one who had been arguing with Sheryl clicked his tongue and slunk out of the base. Most of the others followed his lead, leaving only a few frowning children behind.

Still smiling, Sheryl bristled as she turned to the youngsters. "What do you want?" she asked. "If you don't need anything, kindly get out."

"You know what we want," one of the children sullenly responded. "Let us join your gang."

"Will you acknowledge me as your boss and follow my orders?"

"Yeah. You're the boss, and you call the shots."

Sheryl looked pleased. "In that case, welcome aboard. But get out of my hair for today—I've got a lot to do. Come back tomorrow night. I'll introduce you to Akira before too long."

The children would rather have stayed in the relative safety of the stronghold, but they couldn't disobey someone they had just accepted as their leader. They exchanged looks and then reluctantly departed.

When they were all gone, Sheryl retreated to an inner room. There, she listened closely for sounds of anyone else in the building. Five minutes passed, then ten. As soon as she felt certain that she was really alone, a startling transformation came over her. All of the fear and anxiety she had been struggling to hide surfaced. She barely bit back a scream, breathing deeply to steady her nerves.

"That was close!" she told herself. "So close! They almost killed me! But I made it through alive!"

Sheryl had Akira's backing, but he wouldn't always be around to protect her. Her dangerous stunt just now had been her first step toward creating a sanctuary where she could be secure without him. For a little while, at least, she would be safe—or at least, she had done everything she could to be so. The rest was up to chance, she thought, as she slowly lowered herself into a sitting position. No sooner had she relaxed than fatigue overtook her, and she slumped over on the floor.

I wish I could have a bath like yesterday, she thought abruptly as sleep consumed her mind.

◆

Some of the departing men lingered outside the base.

"Hey, are we really going through with this?" one asked. "We'll be in deep shit if Sheryl was telling the truth."

"You want us to just hand this place over to that runt?" another responded. "A base like this would be a big boost for us. We can't let it slip through our fingers."

“But we’re talking about a hunter—someone who goes head-to-head with monsters. Are we gonna be okay?”

“She was probably bluffing. That, or the hunter just told her what she wanted to hear. She was bragging about that knickknack he gave her, but it looked so cheap I bet you could find it at a street stall. She’s feeling full of herself ’cause the hunter called her his favorite, but it’ll all blow over if we kill her now.”

“B-But still…”

As the men plotted out an assault on Sheryl, cracks began to appear in their ranks. They shared the same general goal, but some looked nervous, others were obviously impatient, and still others covered their anxiety with a display of scorn and annoyance.

Now that Sheryl had struck a deal with the hunter to revive the defunct gang, its headquarters and the surrounding area were no longer unclaimed. To those who lived in the slums, it appeared that the hunter had taken over Syberg’s gang and turf in retaliation for the attempt to rob him. Would someone challenge the hunter for control of the territory? Normally, any rival would wait and see if it was worth the risk. But if Sheryl were lying, they could kill her and claim the base without fear of retribution. And even if she was telling the truth—or part of it—the hunter might not be all that committed to building up her gang. They might still be able to sweep her murder under the rug.

And if they succeeded, they stood to gain a great prize—a stronghold and territory which they could offer to some other gang in return for a significant boost in status. Weighing those benefits against the risk that a hunter might come after them divided the men into optimists and pessimists.

“Even Shijima wants this place,” one pointed out. “We’d have it made if we handed it over. No way are we gonna let some twerp snatch that out from under our noses. Who’s with me?”

“But if Sheryl’s telling the truth, that hunter’s gonna be trouble,” another countered. “What’ll we do if he finds out?”

“If the hunter was anywhere near here, Sheryl would’ve brought him to that meeting. Now’s our chance.”

“Maybe he’s hiding.”

“Like hell he is. Who knows if Sheryl really even cut a deal with him? Maybe he just told her whatever it took to keep her quiet while he was doing her. What hunter gets hung up on a promise to some broke kid?”

“W-Well, yeah, but…”

The jumble of opinions didn’t qualify as a debate, but it still served to divide the men into two distinct camps: those in favor of action and those who preferred to retreat.

The ringleader of the would-be attackers clicked his tongue, disappointed by the others’ spinelessness. “Fine, we’ll do it ourselves,” he

said. “The rest of you stand around and keep watch. You’d better be good for that much, or what’re you even here for?”

“Well, all right. If that’s all.”

“Good. Let’s move.”

The raiding party nodded to each other, readied their guns, and prepared to storm the building. An instant later, they’d been shot. Some died instantly from bullets to the head, while others suffered gut wounds, and a lucky few even escaped with injuries that were serious but survivable. But all of them crumpled to the ground.

Screams erupted from the men who remained standing, those who had favored retreat. They looked around wildly until Akira emerged from a nearby alleyway, his rifle poised to fire. He stopped a short distance from them, totally unfazed despite the men he had just killed, looking so calm that the survivors shivered.

One stammered, “Y-You’re—”

“I’m the hunter Sheryl made a deal with,” Akira said curtly. “I shouldn’t need to say this, but just in case: hands off Sheryl. Got that?”

“Y-Yeah.”

Akira nodded and turned to go. Before he got far, however, one of the men on the ground, trembling with agony, summoned the last of his strength to point his gun at the boy. Without breaking stride, Akira swung the muzzle of his rifle around and pulled the trigger, firing several shots into the man. Then he finished off the other surviving attackers as well. The unscathed men—who had, it turned out, made the wiser choice—let out muted shrieks as they watched.

“H-Hey,” one of them called at Akira’s retreating back. “If you cut a deal with Sheryl, why weren’t you in there with her?”

Akira looked back and calmly pointed to the corpses. “Can’t you tell?”

And with that, he was gone.

“He sat that meeting out on purpose?” the man muttered. “What a crazy asshole!”

As far as they could tell, Akira had absented himself from the meeting in order to lure out Sheryl’s enemies. They grimaced as they looked at the corpses, realizing in terror just how easily they could have joined their former companions in death. Just when they’d gotten free of one trigger-happy ex-hunter, along came an even more viciously cold-blooded hunter to take his place.

“He killed ’em like it was nothing. I always knew all hunters were rotten,” one grumbled. Then he looked around in panic, in case Akira had overheard him. He sighed in relief once he realized that the hunter was nowhere in sight.

The men who were still on their feet exchanged glances and hurried away, leaving behind them only the corpses of those who had made the wrong choice.

◆

Are you sure about this, Akira? Alpha asked on their way back from the massacre of Sheryl's enemies.

Yeah. I was never gonna have the time to guard Sheryl round the clock. That scare should keep her alive for a little while—the rest is up to her. After a pause, he added, Why? Does that bother you?

Alpha determined that Akira seemed unlikely to put himself in danger on Sheryl's account if it were unnecessary—another step forward in her analysis of his personality.

No, as long as you're fine with it, I don't mind, she replied. Just be aware that you'll be training hard tomorrow to make up for what you missed today. She sounded threatening, but as she spoke she adopted a cheerful and rather brazen smile.

S-Sure thing. Akira imagined nervously just how grueling his routine was going to be.

Sheryl, who knew nothing about what had transpired, was startled to discover bodies lying in front of her base early the next day.

◆

Morning found Sheryl waiting outside Akira's hotel, hoping for a word with him. Before long, he emerged, kitted out for a trek into the wastelands.

"Good morning, Akira," she called, giving him her best attempt at a winning smile. Such looks had always come through for her in the past.

"Morning," he responded lukewarmly. "What do you want now? I'm on my way to the ruins, so keep it short."

"Oh, okay." His resistance to her charms bothered her, but she quickly shook it off and got straight to the point: the current state of her gang, the location of its headquarters, and the question of how they would keep in touch. She also suggested, in a suitably coy manner, that she would really, really like him to stop by the stronghold that night to meet her new recruits.

"And if possible, I'd like you to put in regular appearances at my base," she continued, undaunted even though he continued to show no reaction to her charms. "Just when you have a free moment, even."

"I'd never get a chance to go, then," he responded. "There's no rest for the poor, and I'm always busy."

Sheryl's smile grew strained. She could tell that he was in earnest.

Although Akira himself wasn't aware of it, part of him rebelled against committing to anything that might limit his options in the future. A hunter never knew what the next day would bring, so his profession might force him to routinely miss his appointments. And so, Akira reasoned unconsciously, he shouldn't make promises that he couldn't keep.

But Sheryl couldn't read that deeply into the inner workings of his mind, and she began to worry. "C-Could you please find some way to *make* time, then?" she persisted. Her gang's future was in jeopardy if she couldn't get even a vague promise from him. If the other slum dwellers convinced themselves that Akira had abandoned her—and they would if he never

visited her headquarters—she wouldn't last long. So she put all her experience to use in the desperate look she gave Akira as she pleaded.

But Akira's response was as muted as ever. "We'll work that stuff out later," he said. He didn't bother to hide his annoyance as he brusquely cut the conversation short. "I guess I'll stop by tonight if I can. We can talk details then."

"A-All right. We'll discuss the particulars at the base, then. I'll be waiting for you," Sheryl replied, relieved—or so she told herself—that she had managed to secure a promise for the time being. She also didn't want to make Akira's mood any worse than she already had.

"Is that all?" he asked.

"It is." But a moment later, she corrected herself. "Oh, I almost forgot. I found a bunch of dead bodies in front of my base."

"So? There are bodies all over the slums."

"Well, yes, but there were so many of them that it worried me a little. I'm sure you'll be fine, but I just thought I should warn you to be on your guard when you come."

"Oh, okay. See you."

"Take care."

Once Akira was out of sight, Sheryl's friendly smile gave way to bemusement. I brought the bodies up because I thought he might have killed them, she thought. Did I guess wrong? Still, he seemed evasive, so maybe it was him after all.

Supposing he had done it, why hadn't he told her? She couldn't think of a satisfactory explanation. Whether he wanted her to feel indebted to him or just didn't care, he had no reason to hide his involvement.

I can't figure it out. Of course, they could have just gotten themselves killed in a fight.

She glanced absentmindedly at the pendant Akira had given her the day before.

This thing really is cheap. It helped me to pass myself off as Akira's favorite yesterday, but I don't think I was that convincing. Should I get him to buy me something better, even if I need to pay him for it?

Sheryl pondered her next move as she made her way home. She had enlisted Akira's aid, but her prospects still looked grim.

Chapter 13: The Unlucky Ones

Back in the desert near the Kuzusuhara Town Ruins, Akira was training against AR monster simulations. His targets no longer waited for him to attack: they roamed around and would even charge Akira when they caught sight of him, firing their back-mounted weapons or sprinting to sink their fangs into him. Being virtual, they couldn't harm him, but he was learning to keep his cool and fire without flinching against a variety of adversaries.

But Akira still found it challenging to land shots precisely where the monsters were most vulnerable, even when he aimed calmly. Every time he failed to bring one down, he suffered a simulated death, adding to the growing pile of his virtual corpses. Though they were only images, they bore witness to the many, many ways he could die, and he cringed every time he noticed a version of himself missing limbs—or, in some cases, half of his body—or ground to mincemeat in a deluge of bullets.

"I'll never get used to seeing myself dead," he muttered, "even if it is all faked for training."

Nor should you, Alpha soberly cautioned. Don't take this lightly just because it's only a training exercise, unless you want the same thing to happen to you in a real fight.

"I know that." He considered briefly before continuing, "Still, the East is crawling with monsters like these, and plenty of hunters—maybe most of them—can take them out without breaking a sweat." He sighed. He could feel himself improving, but he felt further than ever from his ideal. "When I got fully registered, I was thrilled to finally be a real hunter, but who knows how long it'll take me to get my skills up to snuff at the pace I'm going."

Alpha knew that some people would keep walking until they reached their goal, no matter how long the journey, as long as an unbroken path existed; most, however, would grow discouraged at the distance and give up somewhere along the way or even before they started. Akira was still sticking to the trail at the moment, but there was no guarantee that he would keep doing so. She couldn't afford to let him burn out before her job was done, so she flashed him a reassuring smile and tried to change his perspective.

Don't be such a pessimist, she said. Equipment is a big part of it, so you'll have things a lot easier once you save up enough money to afford better gear.

"Really?"

Really. Just for your reference, Elena and Sara—those hunters you rescued—would have no problem taking down a whole pack of the monsters you're training against. I can't say whether they would break a sweat, though.

Akira was taken aback. "If they're really that good, then how come they needed my help that time?"

Akira was still lacking in combat experience and tended to underestimate even his own skills. So it was no surprise to Alpha that his assessment of the women's abilities was somewhat wide of the mark. She kept that to herself, however.

Fighting people isn't the same as fighting monsters, she replied. The colorless fog also had something to do with it, but the biggest factor was just plain bad luck. They were on your trail, so maybe some of your luck rubbed off on them.

Akira pulled a face. "How about you stop dragging my good name through the mud?"

Oh, I most humbly crave your pardon.

She smiled, and Akira turned back to his training, trying to ignore the nagging thought that she might have been right. As he threw himself into his firing exercise with renewed intensity, he forgot his worries about how far he had to go—much to Alpha's satisfaction.

Once Akira finished practicing his marksmanship, he embarked on an expedition that doubled as a scouting exercise. He began, as always, by surveying the ruins through his binoculars. Normally, if the coast looked clear, he would then make his way carefully among the crumbling structures. Because self-sufficiency was the goal of the exercise, Alpha ordinarily ceased her instructions while he assessed the safety of the vicinity and plotted a route himself. But not this time.

Akira, connect your binoculars to your data terminal.

"Hmm? Sure."

Once he connected the plug, Alpha assumed control of the binoculars via the terminal. Under her guidance, the zoom fluctuated without warning, while the mounted lenses glanced rapidly around. When she wanted to see something outside the maximum field of view, she directed Akira to shift the binoculars in the desired direction. The view through the binoculars changed with such dizzying rapidity that Akira barely knew what he was looking at, but Alpha noted every detail.

Get into the ruins! she shouted, suddenly deadly serious. *Run!*

Akira ran. He knew from experience that, when she spoke like this, he could die if he stopped to ask questions.

What's up?! he shouted back. Telepathy allowed him to speak easily while sprinting without disrupting his breathing, something impossible with normal speech.

A pack of monsters is attacking a semi truck in the ruins, she replied.

Wait, what? Why are we going into the ruins, then? Shouldn't we be running the other way?

Keep running no matter what you hear. It's a big pack. The people in the truck are putting up a fight, but it's only a matter of time until they're killed.

Akira looked doubtful, but he maintained his pace, still fully cognizant of how dangerous it was to disobey her.

Isn't that even more reason to run the other way? he asked. I've got no obligation to stick my neck out for total strangers.

At other times, Alpha would have reminded him of his own decision to help Elena and Sara, but she reluctantly refrained from doing so now.

Naturally, she replied. I'm prioritizing your survival by guiding you to the safest place.

So why does that mean running toward the monsters?

It was a reasonable question, and Alpha's answer revealed just how dire their situation was. I'm sorry to say that the pack has already spotted you. They're focused on the truckers now, but you're next. You'd never make it back to the city ahead of them, and you stand zero chance against that many monsters in the open desert.

Akira scowled. So, they're gonna take us out one by one unless we gang up to fight back!

You've got it. And even if you decide to run, you'll stand a better chance in the ruins, where I can support you at full capacity. But meet up with the truckers first—you'll have the best chances if you band together.

Come on, truckers! Hold out until I get there! Akira pleaded, now desperately concerned for the people he had dismissed just moments before. Damn it! Are we in this mess because of my bad luck too?! Whatever happened to my good luck?!

I don't know whose bad luck it is, Alpha replied, but if you're right, the people in that truck are shouldering some of yours. I always knew that meeting me was the last of your good fortune. But don't lose hope—you don't need luck when you've got me!

Her grim expression softened into a smile, though she still looked tense. Akira took this as a sign that his situation had improved somewhat. He frowned when she agreed he was unlucky, but he never stopped running for his life.

◆

The massive trailer truck made its way across the desert east of the Kuzusuhara Town Ruins. It had been designed from the ground up to withstand long hauls through harsh terrain—as the machine gun mounted on its roof made plain. Two men rode in its cab.

Katsuragi, a middle-aged arms dealer, operated out of this vehicle, which doubled as his mobile store. The only things hunters wasted more than money were lives, and long years of dealing with such customers had taught Katsuragi to be very, very shrewd.

Darius, Katsuragi's partner, was more of a soldier than a businessman, and he spent most of his time standing guard over the shop. Although he looked younger than Katsuragi, something about the way he carried himself said that he had racked up an unusual amount of combat experience. Unlike his partner, who went to work in body armor, Darius wore a powered suit.

To the east of the ELGC's territory lay a vast and deadly expanse known as the Uncharted Zone or the Beyond. There monsters the size of mountains strode calmly through an environment so harsh that it repelled even the mighty ELGC's efforts to survey it. But where such titans roamed, relics of the consummate civilization that had birthed them were not far off, and the profits to be made off of them justified the risks of braving the Beyond—at least in the eyes of the ELGC, which continually funneled astronomical sums into exploring it. The hunters on the Front Line—the easternmost border that butted up against the Zone—were naturally the best of the best, the cream of their profession's crop: teams that even major corporations hesitated to cross, and individuals with enough power to take on the ELGC.

Katsuragi and Darius had been stocking up on goods near the Front Line and were now on their way back to Kugamayama City. Usually only corporate transports could afford to take a chance on this perilous route, and then only escorted by convoys of hired bodyguards. A private trader foolhardy enough to make the run, however, could make a killing—if they had a buyer lined up. Only the finest equipment saw use on the Front Line, and most hunters in the Kugamayama area didn't need it, couldn't afford it, and wouldn't have known how to use it even if it fell in their laps. But Katsuragi, ever the wheeler-dealer, had succeeded against all odds in striking a deal. Now, with their trailer full of premium goods and the city nearly in sight, the partners' gamble was about to pay off—if they survived the peril hot on their heels.

The truck swayed wildly as it abruptly swerved in a new direction—both men knew that speed counted for more than comfort at the moment.

"I told you we should've hired more guards!" Darius barked in the cab as it jolted around.

"Oh, can it!" Katsuragi shouted back. "You agreed that we couldn't afford it! And we're only in this mess because *you* changed our route partway here!"

"*You* can it! We didn't hire the guards long enough for the original plan! If only we weren't so broke, we could've taken a safer detour!"

"Money, huh?! That's what it all comes down to?!"

"You bet! Money makes the world go round!"

Both men burst into a hearty laugh—laced with desperation, thanks to the trampling, howling swarm of monsters that was kicking up a cloud of dust in their truck's wake. The men had turned the machine gun on top of the truck against the beasts, shredding countless creatures into chunks of flesh, until the magazine was empty. Yet to no avail: the brutes had charged relentlessly over the bodies of their fallen packmates and had even drawn the attention of other nearby monsters to swell their ranks.

The hunters hired to guard them had abandoned them and fled as soon as the pack grew too large to handle, on the grounds that the merchants had broken the terms of their contract; they would never have run afoul of the pack if they had stuck to the agreed-upon route. The hunters had also

taken about half of the pack with them when they left, so they had arguably earned their pay—although not necessarily to Katsuragi and Darius's satisfaction.

The merchants' laughter gradually trailed off, along with the initial rush that came from struggling for their lives. Darius assumed a serious expression, partly to fool himself into keeping calm, and forced himself to face the facts.

He sighed. "So, what now? We're screwed if we don't do something."

"I know," Katsuragi answered, looking equally sober. "Let's start by changing course to the Kuzusuhara Town Ruins."

"Why there?"

"Because if we keep heading toward Kugamayama, we'll be done for anyway, whether the monsters get us or not."

Everyone knew what happened to people who led monsters into a city, even if they were fleeing for their lives: the city blasted them to smithereens along with the beasts. Any survivors had to bear the city's defense costs and pay damages for threatening public safety. Such a fine was far more than one person's assets could even begin to cancel out—but it was the treatment they received while paying it off that made death seem preferable. And yet, some desperate souls tried to enter a city anyway, clinging to a last sliver of hope. Such people were to blame for most of the monster attacks on the slums that Akira had experienced.

"Listen, Katsuragi, I'm not an idiot," Darius replied. "I know why we're not going to the city. I'm asking why we're going to the ruins."

"The ruins have their own monsters," the trader explained. "There's a chance that the pack chasing us will recognize the place as someone else's turf and back off. And the heart of those ruins is one of the toughest sites in this area, meaning some hunters in there might be able to take out these things for us. You put up the emergency listing, right?"

"Yeah. Now if only some hunter takes us up on it."

Ordinarily, any job issued through the Hunter Office needed to pass a series of relatively time-consuming inspections. Emergency listings, which underwent only the most cursory screening, allowed clients in urgent need to expedite the process. Most hunters saw no harm in accepting such jobs, considering the relatively generous rewards that desperate people tended to offer—somewhat enforced by the Office, which exacted severe penalties for fraud. An emergency listing was thus more likely to attract help than an indiscriminate distress call, making it the first resort of many beleaguered travelers in the wastelands.

"The city is off-limits, so the ruins are our best and only chance. The rest comes down to our luck. Come on!" Katsuragi shouted. His grim look cut the conversation short.

The merchants drove straight into the Kuzusuhara Town Ruins. They did their best to choose streets that would admit their bulky truck, but they

were unfamiliar with the terrain, and their hastily downloaded map was less than accurate. Luck would determine how far into the ruins they got.

As it turned out, their luck was bad. Katsuragi and Darius drove into a cul-de-sac cluttered with rubble, forcing them to stop their truck. To top it all off, the monsters had pursued them into the ruins without regard for territorial boundaries.

“Katsuragi! This is where we make our stand!” Darius cried out, steeling himself. “Reload the gun! Then get back in the driver’s seat and open fire! It’s too late to grumble about ammo costs!”

“I know! You be careful too!” Katsuragi replied, scrambling to load the reserve ammunition while Darius hopped out of the cab and readied his weapon.

◆

Akira had been running like mad since Alpha’s warning. He was now near enough to the ruins to see the pack with his naked eyes. The monsters spotted him too, and some gave up on the truck in pursuit of this fresh prey. The boy scowled and gripped his AAH tight when he saw one after another peel off from the pack, but he kept running.

Alpha! They spotted us! he shouted. Should I change course?!

Alpha looked equally grave as she led his way, but her plan was unshaken. Don’t worry, and keep going! I’ll adjust your route as needed! And take some of that medicine now, while you have the chance!

You’re assuming I’m gonna get hurt again?!

It counteracts exhaustion! Don’t expect any rest breaks until this is over! But it’s just like training—you’ll be fine as long as you follow my instructions!

I die all the time in training! Akira protested.

Then fight like the times you survived! Hurry up! Here they come!

Akira watched the monsters out of the corner of his eye. He fished out a capsule, swallowed it, and mentally prepared himself for a fight that would require the medicine’s extra help.

Alpha signaled him to halt, and he turned his rifle on the hostile swarm. Indicators popped up in his vision, showing him which of the onrushing beasts to prioritize and highlighting each creature’s vulnerabilities. A blue line extended from the muzzle of his weapon, anticipating his bullets’ trajectory.

Akira earnestly singled out his highest-priority target, took aim at its weak spot, and squeezed the trigger. Gunfire filled the desert air as his anti-monster bullets found their marks: gouging flesh, breaking bones, rupturing organs, and inflicting fatal wounds even when he missed the exact vulnerable point he was aiming for. Beasts with wounded limbs stumbled and fell. Those unlucky enough to catch a bullet in a vital spot died instantly and tumbled forward, propelled by their own momentum.

The targets in Akira’s vision changed from points to lines, along which he swept his rifle as he mowed down threats with automatic fire. Monsters

fell, flinched, or stopped in their tracks under the rain of bullets. That left Akira an opening, and he sprinted to his next firing spot, which Alpha had helpfully marked for him on the ground. Then he opened fire once again.

All the while, Alpha kept guiding him unerringly, predicting the creatures' movements with an accuracy that bordered on clairvoyance. She even factored in the mistakes he was likely to make on account of his inexperience, making him appear far more skilled than he actually was. He fought so effectively that he even surprised himself.

By the time Akira finally made it to the ruins, scattering monsters all along the way, a doubt had formed in his mind.

Mind if I ask you something, Alpha?

Awfully bold of you, under the circumstances, she replied, but go ahead.

I recognize some of these monsters from training, he said. Don't these ones seem kinda weak to you?

No, they're about average.

Then how come they took me out so many times in training?

Because your training dummies don't hesitate, flinch, cower, or run, Alpha explained. I set them to mechanically attack you until they die.

What'd you do that for?

To make certain you don't forget how frightening monsters can be—which you would if you beat them easily. Given how desperately you've been fighting today and how far it's gotten you, I'd say that you ought to thank me. She flashed a cocksure grin.

Yeah, I guess, Akira grudgingly admitted. The experience really had come in handy, and he was in the middle of combat, so he shoved his annoyance aside and sprinted to the next place she had marked.

◆

Mountains of dead monsters stood around the truck as monuments to Katsuragi and Darius's desperate resistance. Rivers of blood flowed from the bullet-ridden corpses, feeding a vast crimson pool. Unless the men finished their work before the stench of carrion drew more beasts from the ruins, they would have two packs to contend with.

Hadn't they killed enough? they wondered at an unconscious level. Wasn't it about time for the monsters to break and run? But the beasts seemed to sneer at their hopes as they continued their assault, trampling the carnage that had once been their comrades into the ground that blood had turned to mud.

Katsuragi's machine gun blasted every monster that got near the truck into scraps. Darius fired into target after target until they lay still. Each fought with every fiber of his being; if they let up their hail of bullets for even a moment, they would join the mountains of corpses and lake of blood.

The merchants were running out of steam. They overwhelmingly outgunned the monsters, but a steady stream of reinforcements kept the enemy ranks from thinning.

“Shit! They just keep coming!” Katsuragi snapped. “Why don’t you freaks forget about me and chow down on those bodies?! There’s heaps of ’em, and tearing me up wouldn’t even get you a sausage apiece!”

Then things went from bad to worse. “Darius! The machine gun’s almost out of ammo!” Katsuragi shouted. “Can you hold them off while I reload it?!”

Darius grimaced. A break in the sweeping machine gun fire might invite a charge from the pack, but losing its support entirely spelled certain doom. He couldn’t say no, so he barked, “Make it quick!”

The machine gun fell silent, and the writhing mass it had held at bay surged forward. Darius watched them come, certain that alone he stood no chance against so many. *It’s hopeless*, a cold, calm voice in his head told him, and he did not doubt it.

A monster sprang at him. But just as he prepared for death, it took a bullet and went sprawling. Its body impeded the other beasts for a moment —a moment in which more bullets rained down on the creatures, dropping them like flies.

Recovering from his surprise, Darius resumed his own assault on the pack. As he did so, he glanced over and saw Akira firing from the window of a nearby building.

◆

Once in the ruins, Akira went to the exact spot Alpha indicated. From the window of a derelict building, he unleashed his AAH, determined to add as many monsters to the mountains of corpses as he could.

There’s way too many of them, he grumbled, pulling a face. Were all those monsters seriously going to come after me?

They still might, Alpha replied, smiling encouragingly. Keep up that covering fire.

Obviously. No way am I taking those things head-on. Akira drew on all his training, knowing that this time he wouldn’t get a second chance if he blew it.

For Katsuragi and Darius, that made all the difference. One more AAH assault rifle shouldn’t have been enough to turn the tide, but with Alpha’s guidance it bought time to get the machine gun back up and running. Under her ongoing supervision, Akira kept the whole group operating at maximum efficiency, as Katsuragi and Darius soon picked up on his tactics and adjusted their own to match.

“Did our emergency listing pay off?” the merchant mused as he reloaded the machine gun. “There. Luck’s turning our way. It won’t be long now.” He resumed his suppressive fire, leaving even more dead monsters on the heaps of corpses.

Akira, Katsuragi, and Darius continued to support each other as they rushed to eliminate the pack. Katsuragi had to reload the machine gun two more times, but in the end they succeeded in clearing out the cul-de-sac.

After the battle, Akira met up with the merchants. The men were startled to see that their savior was a child, but they showed him no disrespect on that account—after all, he had just proved how competent he was.

Grinning in relief, Katsuragi said amiably, “Thanks. You the hunter who answered our emergency listing?”

“Emergency listing?” Akira repeated, confused. “No, I ran here because those things came after me too.”

“Yeah? Guess we’ve both got rotten luck.” Katsuragi didn’t mention that he and Darius had led the pack there, and Akira didn’t ask. The boy felt that his bad luck was to blame for the attack, and regretted that the merchants had taken the brunt of it.

Katsuragi let out a hearty laugh to clear the air. “I’m Katsuragi, and he’s Darius. We run a shop out of our truck, and we’re on our way back to Kugamayama.”

“I’m Akira. I’m a hunter, at least on paper, and I just happened to be in the neighborhood.”

“Oh! What a coincidence; we sell to hunters. You saved our butts, so I’ll give you a deal if you wanna buy anything. Darius! You could at least thank him!”

Darius was performing maintenance on the machine gun. “I know!” he shouted. “Name’s Darius! Thanks!”

“We’re headed into Kugamayama as soon as our machine gun’s back up and running,” Katsuragi added. “Want a ride? I doubt you’re in the mood for relic hunting after this mess.”

Akira certainly didn’t feel like resuming his training. You don’t mind heading back, right, Alpha? he asked. Scratch that. I’m going back, and you can’t stop me.

Alpha chuckled at his somewhat desperate tone. *All right. Let’s call it a day.*

Akira felt relieved, although he hadn’t seriously expected her to refuse. To Katsuragi, he said, “I’d appreciate it.”

“Great! Hop on board!” Katsuragi chuckled, helped Akira into the cab, and hurried Darius along. Once the machine gun was ready, the truck lurched into motion. Designed for the rough terrain of the desert, it made short work of the dead beasts heaped in its path. Akira found the splattered gore rather repulsive, but the men paid it no mind. If anything, it just made them laugh even harder than before.

Chapter 14: Bonds of Fortune, Misfortune, and Chance

The Kuzusuhara Town Ruins were near enough to Kugamayama City for Akira to make the trek on foot, but far enough that most drove the distance. As the three of them rode through the wastelands, Katsuragi and Darius—rejoicing over their hard-won victory—regaled Akira with stories of their previous struggles on the road and shared their impressions of the Front Line. The boy listened attentively—such tales had been hard to come by in the slums.

"Wow," he said. "I never knew it got like that past the eastern border."

"Yup. The Front Line runs up against unexplored territory, so every hunter out there's got a tank, at the very least. They think of 'em the way we think of guns. Course, it takes a tank to stand any chance against the monsters there."

"And that's where you get your goods from?" Akira asked. "Man, running a business must be tough if that's what it takes just to stock up."

"Well, it ain't easy. Even after you've got stuff to sell, you still need connections with clients, the knowhow to seize your chances, and a whole lot more. Would you believe each of these tasks takes just as much work?"

"Huh. That's pretty incredible," said Akira, genuinely impressed. "I could never pull that off."

Katsuragi chuckled good-naturedly. "Don't judge everything based on this trip; I've gotta admit that it was a hell of a lot harder than most. You might get the hang of it better than you think."

Akira tried to picture himself starting up a business, but success eluded him even in his imagination. Seeing his face, Katsuragi guessed his thoughts and cracked up.

"Well, everyone's got their own path to the top," he said. "Yours is hunting, and mine's trading, is all. I'm selling out of my truck now, but with our profits on this deal I'm planning to expand. I'll have my own governing corporation one day, and then I'll join the Big Five."

Akira was startled. Growing up in the slums, he hadn't had much of an education, but even he knew how preposterous that claim was.

"The Big Five?" he repeated. "Seriously? I'm impressed you even dream that big."

"Once I run a governing corporation, I'm gonna issue my own currency and call it the 'katsuragi.' I'll put things like '50,000 katsuragi' on my price tags." The merchant's expression sobered somewhat. "This load is my first step toward that dream, so I'm not kidding when I tell you how grateful I am. You saved us from having to dump the goods and run."

"Really?" Akira replied. "In that case, pay me back some other time. I bet I could use a good businessman in my corner."

“Sure, but don’t ask for too many discounts. Like I just said, I do need money.”

Despite their different lines of work, Katsuragi and Akira were both trying to make their fortunes in the East, and their common goal made decent fodder for conversation. Alpha sat beside Akira, smiling as though she were part of their chat.

Then her smile froze. Akira, grab your binoculars and look out the window on your right. Now.

Her urgent tone put him back on the alert. He scrambled to reconnect his binoculars to his data terminal and allowed her to control them as he peered outside. The display zoomed in on a dust cloud rising from a point in the desert.

After a moment, Akira said, “Katsuragi, that group of monsters was following you, wasn’t it?”

Katsuragi grinned awkwardly. “You figured that out, huh? But hear me out. It’s not—”

“I don’t care who brought them here. Just tell me: did we get the whole pack?”

The merchant’s face darkened. He saw what Akira was getting at. “Darius!” he shouted. “Set all our scanners to maximum range!”

“But we’ll have a hard time picking up smaller monsters then.”

“Just do it!”

Realizing that something must be up, Darius hurried to adjust the scanners.

Katsuragi’s face fell as he scrutinized the incoming data. “Narrow the scan to a sixty-degree sweep at three o’clock!” he barked.

Darius hesitated for a moment. Focusing all their scanners in a single direction would open them up to surprise attacks from anywhere else. But he went along with Katsuragi’s order, and both of them stiffened when they saw the results of this latest scan.

“Excuse me, but I need to know,” Akira pressed. “How much of the pack you led here is left?!”

The scanners confirmed that the dust cloud he had seen was rising from another swarm of monsters—still a long way off but closing in fast. Lithe, sleek quadrupeds sprinted gracefully in the vanguard. Behind them lumbered six- and eight-legged monstrosities, affronts to the very concept of beauty, surprisingly nimble with their overdeveloped muscles. There were scaly dogs and feathered reptiles, faces with a dozen eyes and others with only gaping maws, jaws lined with fangs and toothless mouths that had to swallow prey whole. The science of the Old World had adapted some kinds of beasts to their harsh environment; others it had endowed with a freakishly strong vitality, allowing them to ignore the brutal climate completely. And all varieties of these creatures had flooded out of the eastern wastes to devour their prey.

The faster monsters had gradually pulled ahead of the slower ones, stratifying the pack into multiple distinct groups. The vanguard had set upon Akira and the merchants earlier, while those far to the rear had given up the chase and turned back. Now the middle group—too slow to keep up with the front-runners yet fast enough to stay on the trail—was finally about to overtake the truck.

The traders anxiously discussed what to do.

"Katsuragi, what if we keep heading straight for the city?" Darius asked. "Would we make it?"

Katsuragi shook his head. "No, not in time, and they'd blame us for leading the pack to them. If we go any farther, the city's defense force will wipe us out along with the pack."

Darius sighed, and Katsuragi pitched his own idea.

"Going by our scanners, this truck should be a hair faster than those monsters if we really floor it. Let's just drive around until we pull far enough ahead of 'em to enter the city safely."

Now it was Darius's turn to shake his head. "Nothing doing. The truck's nearly out of power after that long haul. It'd give out on us before we could shake them."

Both men sighed and fell silent. They seemed to be out of ideas, so Akira ventured, "What about going back to the ruins? I know them pretty well, so I should be able to steer us clear of any dead ends. And if we run out of power and have to ditch the truck, we should have an easier time getting away than we would out here in the desert."

He thought it was a good plan—given that Alpha would be doing the actual steering—but Katsuragi had other ideas.

"No!" the merchant snapped. Then, seeing the boy's surprise, he added glumly, "We just left dead monsters scattered all over the ruins. The stink of their blood'll draw out even more—maybe already has. If we're really unlucky, it might even attract something from the heart of the ruins, and we'd stand no chance against that."

Did Katsuragi really think that, or did he have other reasons to reject the boy's proposal? Akira looked to Alpha for confirmation.

You're right that he wants to avoid abandoning the truck for his own reasons, she answered seriously, *but he also told you the truth. Returning to the ruins now would only make things worse.*

Akira joined the chorus of sighs. "So, we'll have to take them on here." Then another idea struck him. "I know. Can we use the gear you brought from the Front Line? It's all cutting-edge stuff, right?"

Katsuragi shook his head. "No, powered suits need calibration for each user, and that takes at least four hours. The guns take special ammo, which we don't have—it ships by a different route... Shit!"

Each of the three naturally thought about their situation a little bit differently, reflected in their varying expressions. All of them, however,

understood that they would have to fight, and their faces were equally empty of hope.

They began preparing for combat. Katsuragi stopped the truck in the best place he could find, then began moving the spare machine gun ammunition to make reloading as quick and easy as possible. Akira and Darius got out of the truck and took up their stations. Battle was only minutes away.

Akira hastily followed Alpha's instructions. He reloaded his AAH's magazine, then removed the spare magazines from his backpack and placed them on the ground nearby. He took an early dose of medicine and placed more capsules in his mouth so that he could swallow them as soon as the effects of the first wore off. He also opened another capsule and poured its powdery contents into his pocket. With that, he was ready at least physically.

Alpha stood beside him as usual, giving him confidence but also leaving him a bit uneasy.

Tell me the truth, Alpha, he said, a little defiantly. Do you think I'll—? Scratch that. Can I win?

He had changed his question because he'd had a feeling that she would have told him he was likely to lose.

Alpha responded with her usual smile. You have a chance. I'll be backing you up, so try to make the most of it.

She wasn't lying, but she avoided mentioning specifics. Hard figures, she decided, would only dampen his morale, rendering his slim chance of victory even more minuscule.

I see. So it's not hopeless. Akira refrained from further questions—he shared her belief that he was better off not knowing.

He readied his weapon, then looked at Alpha as though he were about to say something but stopped himself.

Alpha added cheerfully, As I've told you before, Akira, my help will more than make up for all the luck you spent on meeting me. So, no matter what happens, don't give up. Remember: my support requires your full commitment. Of course, if you're not interested, I could always stop providing it.

Oh, yeah: will, motivation, and resolve are my burden. Akira forced himself to smile back, feeling as though she was taunting him a bit. In that case, I know things look bad, so don't skimp on the help.

Leave it to me, Alpha replied, brimming with confidence.

Her smile drove away his feelings of resignation, which gave way to a determination to see this fight through. Now Akira's preparations were truly complete.

The monsters were already within range of the truck's machine gun, but Katsuragi didn't fire. Rather than waste ammo trying to injure their tough bodies at a distance, he was waiting until they came close enough for the

bullets to deal serious damage to them. Akira and Darius understood that, and they too waited in silence to fire.

This swarm of monsters had to get in close to fight—the traders had eliminated most of the long-range threats during their earlier clash. As long as the three of them stood their ground and didn't cave in to fear, the bloodthirsty horde would draw close enough of its own accord.

When the beasts were so close that the men could see the whites of their eyes, a hail of bullets blasted their front line into a shapeless mishmash of flesh. The next rank charged single-mindedly through the residual mist of blood. Akira took aim at one of them and squeezed the trigger, killing it instantly with a shot to the middle of the forehead. Another monster leaped over its corpse, and he shot it too without a moment's hesitation. He killed yet another and then another, seeming superhuman under Alpha's guidance. Even so, his kills were but a drop in the ocean. Ever more monsters surged forward, forcing a hopeless battle of attrition.

◆

The fierce, desperate fight stretched on. Akira lost track of his kill count and how much time had passed, devoting himself solely to shooting monsters when and how Alpha told him to.

Every action has an opposite and equal reaction, and the recoil from the powerful anti-monster rounds were no exception. His rifle kicked with every pull of the trigger, whittling away at his stamina. Only the restorative effects of the medicine kept him going.

He soon exhausted the spare magazines on his person and found himself snatching those on the ground as he ejected the empties from his rifle. He was fighting panic at the sight of his rapidly dwindling reserves of ammo, but he still fired unceasingly—it was the only way to keep the beasts at bay.

When pain in the arm supporting his weapon told him that the medicine had worn off, he began slowly ingesting the capsules wedged in his mouth, feeling their power gradually permeate his system. He would have collapsed long before without it. And yet he gritted his teeth against the urge to swallow all the medicine at once and quell the pain—he needed to conserve his supply, keeping himself just barely in fighting condition as he continued to fire. Every bullet from his rifle did its duty, but the ranks of his foes never thinned.

Alpha's instructions were virtually flawless, designed to buy time by any available means. She selected targets to delay the swarm's advance as long as possible, taking into account each individual creature's speed and ensuring that corpses would become obstacles and fleeing beasts would stymie those rushing forward.

But could Akira execute her orders perfectly? Not even half of them. Nerves, panic, fatigue, and other factors, compounded with his lack of skill, dulled his movements. Yet Alpha always responded to his failures, adapting her next order to the changing situation.

The battle reached a turning point when an exceptionally fast monster leapt out in front of Akira. Naturally, he focused his fire on the beast, scoring multiple hits on its body. He then dismissed it as dead and began searching for his next target—before Alpha told him to. His experience of killing monsters in similar circumstances made him complacent, the endless waves of threats made him frantic, and fatigue made him careless—all culminating in an error of judgment.

It's not dead yet! Alpha cried.

Akira hurriedly whipped his gun back around toward the creature, but he was too late. Despite its grievous wounds, the beast was upon him, charging through his shower of bullets and finally tackling him to the ground. Akira's first shots had knocked its head just off his line of fire, so it had narrowly escaped death. Even so, the beast's life hung by a thread as it struggled to lock its jaws around its victim's head.

Pinned to the ground, Akira saw the approach of imminent death. Everything seemed to slow down, and he remembered a similar time when a monster had attacked him in the slums. Instinctively, he repeated what he had done then, jamming his AAH and the arm holding it into the creature's gaping jaws. The monster slowed for an instant, stung by the muzzle digging into the back of its throat. And in that brief opening before the creature's fangs tore his arm to shreds, Akira smiled and squeezed the trigger.

A burst of gunfire blew through the creature's skull from the inside. It fell with bullets spewing out the back of its head.

Akira heaved the monster's corpse to one side, but his triumph was short-lived. Sharp pain alerted him that the beast had torn up his right arm when it initially pounced.

Alpha didn't want his pain or close shave with death to dull his reactions. *Treat that arm now! Remember the medicine in your pocket!* she snapped sternly.

He bit back his agony and smeared the powder directly onto his wound, which caused even more excruciating torment.

Don't pass out! Alpha shouted. You'll die! Hang in there!

Akira barely clung to consciousness as the medicine did its agonizing work. Yet he staggered to his feet, his face twisted, and swallowed the remaining capsules. The medical nanomachines sensed his pain and swarmed to treat his injury. But every time he had to move his arm the wound tore open again, initiating a painful cycle of damage and repair.

Akira endured the torment and resumed firing. Other monsters had gained a lot of ground while he was out of action. A single error of judgment had worsened his situation considerably, and it kept on deteriorating, despite the trio's desperate efforts. The pack was practically within melee range now.

"The machine gun's running out of ammo," Katsuragi groaned in the driver's seat. "We're done for." His mic broadcast his gloomy prediction outside the truck.

Darius muttered, "So, this is it."

Akira said nothing. He agreed—he just lacked the energy to speak.

Then, at last, the machine gun was empty.

It's over, Alpha announced. Akira saw that she was smiling gently, as befitted a message of doom.

He forced a weak smile in return. "Looks like it."

We're saved.

"Huh?!"

The exclamation of surprise had barely left his lips when shells rained down on the pack, blasting the nearby beasts to shreds with countless explosions. A barrage of anti-materiel warheads followed, pulverizing the swarm and securing the area around the truck.

Akira could hardly track what was happening, but he noticed Alpha pointing exultantly off into the wastelands and spun around to look. A car designed to handle the desert was racing toward them, bombarding the monsters as it came. With his Alpha-augmented vision, he could make out its details, and what he saw shocked him.

"I know them!" he cried.

Two familiar hunters rode in the vehicle: Elena and Sara, the women he had once rescued. Sara perched on top of the car, bracing a weapon so massive that it seemed all out of proportion to her body. Warheads streamed out of its immense barrel.

“Elena! These the people we’re here to rescue?!” she shouted. “They’re pretty far from where we expected to find them!”

Elena was likewise unleashing a barrage of projectiles from the car’s built-in machine gun. “That’s right,” she replied. “The listing was for the Kuzusuhara Town Ruins, but they must have managed to run this far. Keep blasting away.”

“Sure thing! No need to hold back when the client’s covering our ammo costs!”

The one-sided onslaught continued as the expensive, top-of-the-line munitions that Elena and Sara—now back on sound financial footing—had prepared did their job. Akira watched, half-stunned, as the pack of monsters vanished, swallowed by the storm of bullets and rain of shells. The ferocious barrage laid the area to waste, easily annihilating the mob against which he and the merchants had struggled for so long.

◆

Akira, Katsuragi, and Darius met Elena and Sara in the truck rather than heading straight for Kugamayama. The trailer, which doubled as a mobile store, provided a surprisingly spacious place for both groups’ negotiators—Katsuragi and Elena—to hash out the aftermath of the emergency listing.

Akira stood to one side, where he wouldn’t get in the way of the discussion. Sara joined him.

“Thank you so much for saving us,” he said, bowing deeply to her. “I would have died without you.”

“Don’t mention it. I’m getting paid,” she replied, smiling. “The job turned out easier than we expected because you guys took out so many of them.” The ample breasts in front of Akira showed that the battle really hadn’t taken much of a toll on her. “Still, I was surprised to find you here. What are the odds of getting caught up in a swarm like that? Talk about unlucky.”

“Yes. I was just seriously thinking the same thing.” He grinned ruefully and asked, not altogether seriously, “Do you think buying a charm or something would help?”

Sara chuckled. “Luck does count for a lot. You never really know what’s coming, no matter how much intel you gather ahead of time. We found that out the hard way not too long ago. As for charms, you can buy one, but I think making one—out of a memento from a time you got lucky—is just as good. This is mine.” She pulled down her protective suit’s front zipper and withdrew the cartridge pendant from between her breasts. “I made it out of something we got from someone who bailed us out when *we* nearly died. It reminds me of how overconfident and fortunate I was then.”

“I… I see.” The sight of Sara’s cleavage up close made him feel uneasy and a tad embarrassed, for reasons that he didn’t really understand, but he managed to keep his cool. Sara noticed that something seemed a little off about him, but she chalked it up to his recent brush with death.

Lucky you. Alpha smirked beside him. Your good deeds are already coming back to help you. Aren't you glad?

Of course I am, he responded. I told you helping them out back then was the right call.

True. You made it out alive, and you even got a peek at a hot lady's tits. She grinned impishly. Although mine should be just as good if you're not planning to touch them. Or is knowing that you could touch them, even if you don't want to, what really counts to you?

Shut up. Akira's face froze to hide his feelings. Alpha's smile widened at the sight.

◆

Akira had survived his battle with the pack: not by his skill and resolve alone, not even with Alpha's first-class support. Only luck—the result of deeds that he couldn't bring himself to call "good"—saved him from inevitable death. But regardless of his motivations, his actions had—for once—brought him something other than misfortune.

The experience changed him more than he realized.

To be continued in Part Two...

>Episode
001
Part One The Alluring Specter

The advanced civilization that once dominated the world crumbled to ruins long ago. As ages pass, the survivors have begun piecing together the fragments of its wisdom and glory as they struggle to rebuild human society.

Rebuild World

Character

SHERYL
A girl from the slums. After Akira demolished her gang, she struck a deal with him to ensure her own survival.

AKIRA
A boy who lives in the slums of the Eastern city of Kugamayama. He became a hunter in pursuit of a better life, and on his first day in the ruins, he encountered a mysterious woman calling herself Alpha.

ALPHA
An enigmatic woman with knowledge of the Old World. Ordinary humans can neither see her nor hear her voice. She makes a pact with Akira to support him in return for his promise to explore a certain ruin for her.

SHIZUKA
The owner of the store Cartridge Freak. She knows the guns she stocks inside and out, and often provides motherly advice to her clientele. Her warm assistance brings in many hunters as loyal customers.

ELENA
A hunter who operates in a two-woman team with Sara. Collecting data with her wide array of motion sensors, high-power scopes, and other scanners, she skillfully analyzes the results and then issues directions to her partner.

SARA
Elena's partner, who provides the team's firepower. Her chest stores nanomachines, which she can expend to dramatically enhance her physical abilities.

That's why I told you not to look back.
"I'm sorry! I'll do it right next time! So please, do something!"
The behemoth gaped wide, howled, and fired its cannon.
A shell landed close to Akira and exploded,
sending rubble flying in all directions.
With another howl, it launched itself toward Akira
on its imbalanced legs.
Rebuild World

>Episode
001
Part One The Alluring Specter

Character Status

These details reflect Akira's status at the end of Volume I, Part One (after the assault on Katsuragi's truck).

He first set foot in the ruins woefully under-equipped with only some beat-up clothes and a handgun. But after he and Alpha earned some money for their finds in the Kuzusuhara Town Ruins, he purchased a new AAH assault rifle. A complimentary set of cheap body armor, courtesy of Shizuka, completed his monster-fighting kit.
After more than ten relic-hunting expeditions, Akira was promoted to Hunter Rank 10, finally earning him the formal recognition of the Hunter Office.

NAME
Akira

SEX
Male

HOMETOWN
Kugamayama City, the East

JOB
Hunter

HUNTER RANK
Rank 10

EQUIPMENT

WEAPON
Handgun
AAH assault rifle

ARMOR
Cheap body armor

GEAR
Standard data terminal

AKIRA

>Episode
001
Part One The Alluring Specter

Weapon Guide

HANDGUN

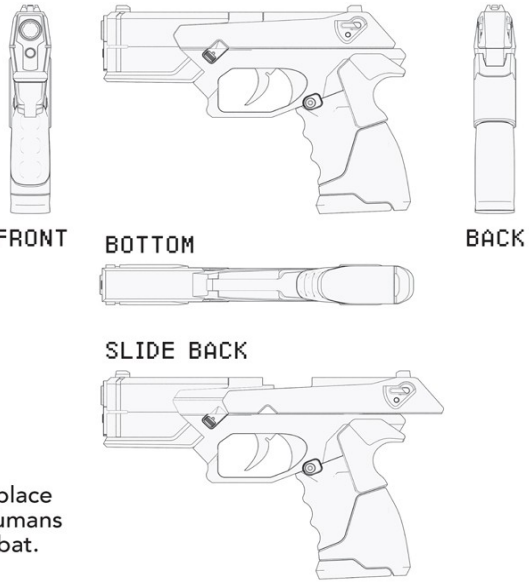

Akira's first weapon.
Ordinary handguns like this one are commonplace in the East. It was designed for use against humans and lacks the firepower for anti-monster combat.

AAH ASSAULT RIFLE

This masterpiece of an anti-monster rifle is manufactured and distributed all across the East. Its basic design has stood the test of time for a century.
The AAH is durable, reliable, and relatively inexpensive for an anti-monster weapon. Many subtypes and modified variants exist, but all fall under the general heading of "AAH assault rifle."

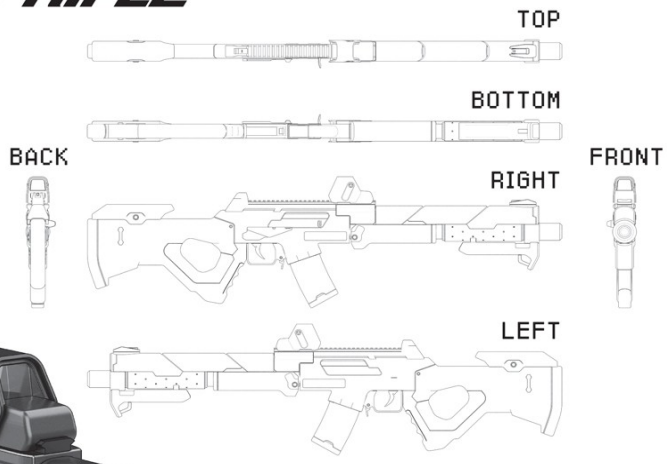

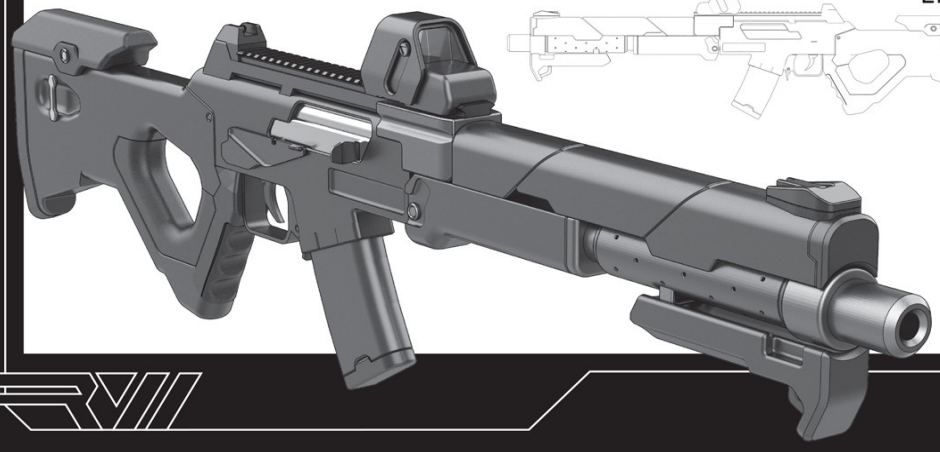

>Episode 001

Part One The Alluring Specter

Monster Guide

WEAPON DOG

Missile-pod type

Gatling-gun type

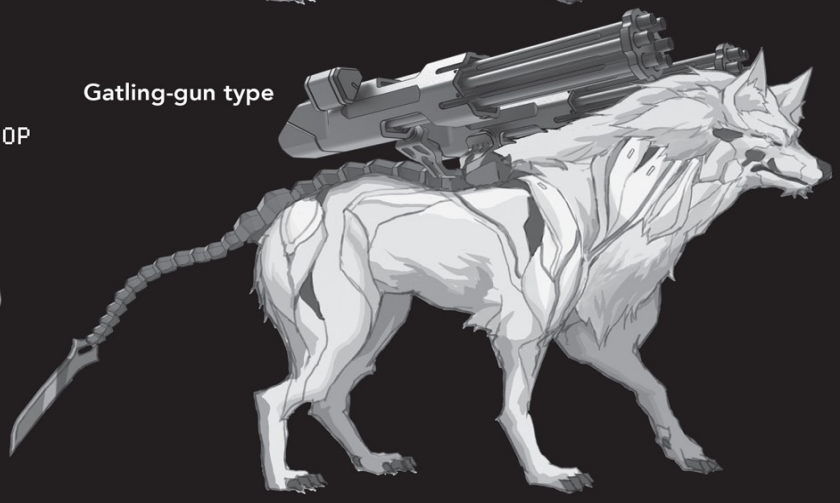

TOP

FRONT

These canine monsters, approximately two meters in length, were originally engineered to provide urban security. After the collapse of civilization, they continued to guard its ruins from thieves, modifying themselves many times in the process. The weapon dog's most notable feature is its ability to ingest metals and other inorganic substances via its mouth and grow corresponding firearms from its back. Witnesses attest to significant variation in these armaments, which can include not only Gatling guns but also rocket launchers and missile pods.

Weapon dogs operate in packs led by the individual with the most powerful weaponry.

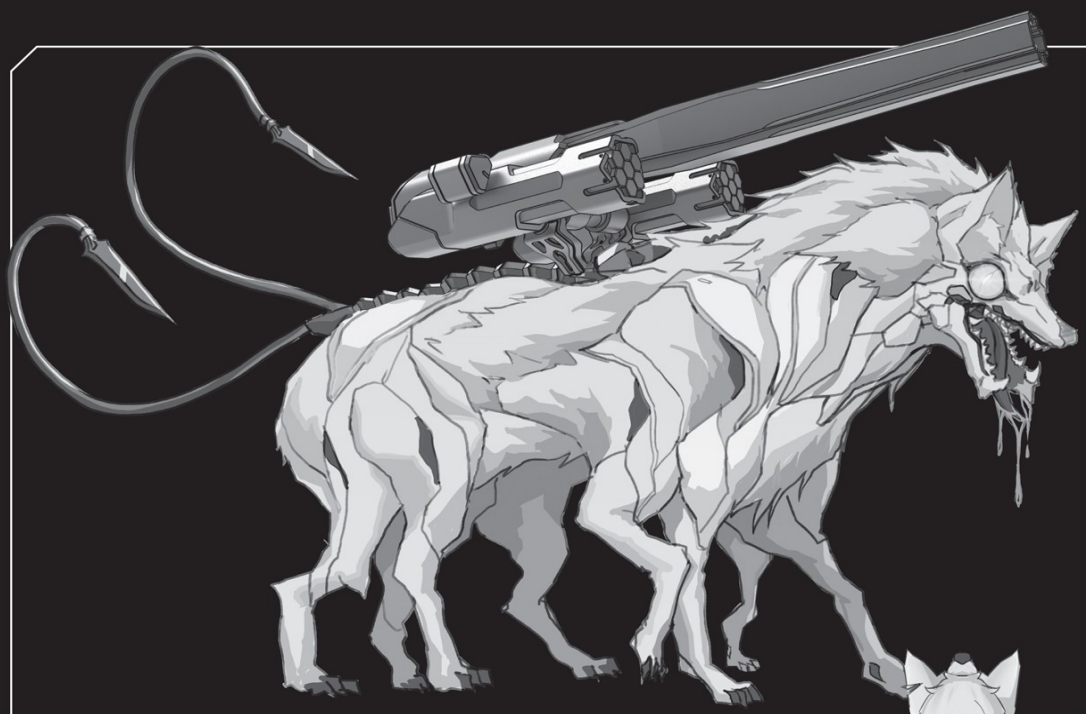

WEAPON DOG SUBSPECIES

This gargantuan, eight-legged weapon dog sports a massive cannon on its back. It has two eyes on the right side of its face and one large eye on the left, and its eight limbs are likewise asymmetrically distributed. Its repulsive form may be a side effect of a mutation allowing the body to support its massive weapon.
According to Alpha, this unique specimen failed when it tried to modify itself. Although its bulk makes it cumbersome, no ordinary weapon dog can compete with the firepower of the artillery on its back.

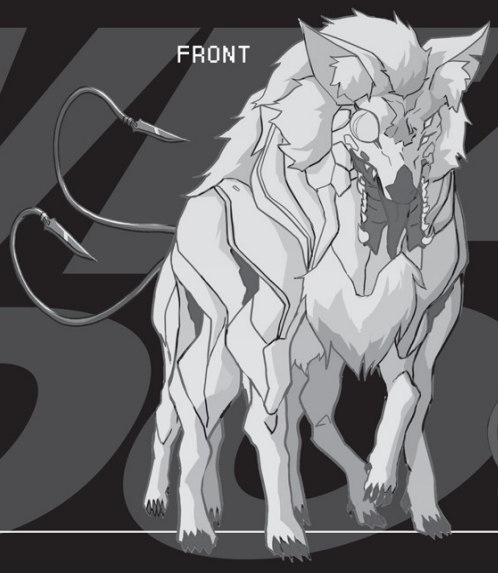

WEAPON DOG

Author: Nahuse
Illustrator: Gin
Environmental Artist: yrish
Mechanical Designer: cell
Rebuild World I
Part One The Alluring Specter

>Episode
001
Part One The Alluring Specter

The advanced civilization that once dominated the world crumbled to ruins long ago. As ages pass, the survivors have begun piecing together the fragments of its wisdom and glory as they struggle to rebuild human society.

Rebuild World

Character

SHERYL
A girl from the slums. After Akira demolished her gang, she struck a deal with him to ensure her own survival.

AKIRA
A boy who lives in the slums of the Eastern city of Kugamayama. He became a hunter in pursuit of a better life, and on his first day in the ruins, he encountered a mysterious woman calling herself Alpha.

ALPHA
An enigmatic woman with knowledge of the Old World. Ordinary humans can neither see her nor hear her voice. She makes a pact with Akira to support him in return for his promise to explore a certain ruin for her.

SHIZUKA
The owner of the store Cartridge Freak. She knows the guns she stocks inside and out, and often provides motherly advice to her clientele. Her warm assistance brings in many hunters as loyal customers.

ELENA
A hunter who operates in a two-woman team with Sara. Collecting data with her wide array of motion sensors, high-power scopes, and other scanners, she skillfully analyzes the results and then issues directions to her partner.

SARA
Elena's partner, who provides the team's firepower. Her chest stores nanomachines, which she can expend to dramatically enhance her physical abilities.

That's why I told you not to look back.
"I'm sorry! I'll do it right next time! So please, do something!"
The behemoth gaped wide, howled, and fired its cannon.
A shell landed close to Akira and exploded,
sending rubble flying in all directions.
With another howl, it launched itself toward Akira
on its imbalanced legs.
Rebuild World

Table of Contents

Cover

Chapter 1: Akira and Alpha

Chapter 2: The Burden of Resolve

Chapter 3: The Reward for Mortal Peril

Chapter 4: Ghost of the Old World

Chapter 5: Akira and Shizuka

Chapter 6: Trust

Chapter 7: Elena and Sara

Chapter 8: Reasons for Killing

Chapter 9: A Real Hunter

Chapter 10: A Dropped Wallet

Chapter 11: Akira and Sheryl

Chapter 12: Sheryl’s Gang

Chapter 13: The Unlucky Ones

Chapter 14: Bonds of Fortune, Misfortune, and Chance

Color Illustrations

Appendix

Bonus High Res Color Illustrations

About J-Novel Club

Copyright

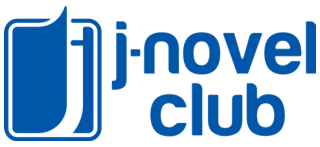

Sign up for our mailing list at J-Novel Club to hear about new releases!
Newsletter
And you can read the latest chapters (like Vol. 2 of this series!) by becoming a J-Novel Club Member:
J-Novel Club Membership

Copyright

REBUILD WORLD Vol. I Part 1: The Alluring Specter
by Nahuse
William Varteresian
Edited by NegativePrimes

This book is a work of fiction. Names, characters, places, and incidents are the product of the author's imagination or are used fictitiously. Any resemblance to actual events, locales, or persons, living or dead, is coincidental.

Copyright © Nahuse 2019
Illustrations by Gin
Environmental Art by yish
Mechanical Designs by cell

First published in Japan in 2019 by KADOKAWA CORPORATION, Tokyo
English translation rights arranged with KADOKAWA CORPORATION, Tokyo

All rights reserved.

In accordance with the U.S. Copyright Act of 1976, the scanning, uploading, and electronic sharing of any part of this book without the permission of the publisher is unlawful piracy and theft of the author's intellectual property.

J-Novel Club LLC
j-novel.club

The publisher is not responsible for websites (or their content) that are not owned by the publisher.

Ebook edition 1.0: August 2022
Premium E-Book